Amana®
JENN-AIR
MAYTAG®

Service

This manual is to be used by qualified appliance technicians only. Maytag does not assume any responsibility for property damage or personal injury for improper service procedures done by an unqualified person.

This Base Manual covers general information

Refer to individual Technical Sheet for information on specific models

This manual includes, but is not limited to the following:

Gas Freestanding Range

AGR5715QD*
AGR5735QD*
AGR5835QD*
JGR8775QD*
JGR8875QD*
MGR5754QD*
MGR5755QD*
MGR5765QD*
MGR5775QD*
MGR5875QD*

MAYTAG®

16022498
Revision 0
November 2003

Important Information

Important Notices for Servicers and Consumers

Maytag will not be responsible for personal injury or property damage from improper service procedures. Pride and workmanship go into every product to provide our customers with quality products. It is possible, however, that during its lifetime a product may require service. Products should be serviced only by a qualified service technician who is familiar with the safety procedures required in the repair and who is equipped with the proper tools, parts, testing instruments and the appropriate service information. **IT IS THE TECHNICIANS RESPONSIBLITY TO REVIEW ALL APPROPRIATE SERVICE INFORMATION BEFORE BEGINNING REPAIRS.**

WARNING

To avoid risk of severe personal injury or death, disconnect power before working/servicing on appliance to avoid electrical shock.

To locate an authorized servicer, please consult your telephone book or the dealer from whom you purchased this product. For further assistance, please contact:

Customer Service Support Center

CAIR Center

Web Site	Telephone Number
WWW.AMANA.COM	1-800-843-0304
WWW.JENNAIR.COM	1-800-536-6247
WWW.MAYTAG.COM	1-800-688-9900
CAIR Center in Canada	1-800-688-2002
Amana Canada Product	1-866-587-2002

Recognize Safety Symbols, Words, and Labels

DANGER

DANGER—Immediate hazards which **WILL** result in severe personal injury or death.

WARNING

WARNING—Hazards or unsafe practices which **COULD** result in severe personal injury or death.

CAUTION

CAUTION—Hazards or unsafe practices which **COULD** result in minor personal injury, product or property damage.

©2003 Maytag Appliances Company

Table of Contents

Important Information 2
Safety Information
- Safety Practices for Servicer 5
- Servicing 5
- Receiving Oven 5
- ALL APPLIANCES 5
- SELF-CLEANING OVEN 5
- OVEN 6
- Delayed Ignition 6
- Precautions 6
- In Case of Fire 6
- Using the Oven 6
- Baking, Broiling, and Roasting 7
- Connecting Range to Gas 7
- Electrical Requirements 8
- Extension Cord 8
- Grounding 8
- Product Safety Devices 9

General Information
- Cooking Nomenclature 10
- Rating label 11
- Functional Operation 11
- Specifications 12
- Model Identification 12
- Service 12
- Parts and Accessories 12
- Extended Service Plan 12

Troubleshooting Procedures 13
Testing Procedures 16
- H1 Control 20
- M1 Control 24
- M2 Control 25

Disassembly Procedures
- Removing and Replacing Range 29
- Front Control Panel 29
- Maintop Assembly 29
- Control Panel 29
- Control Board Assembly 29
- Rocker Switch 29
- Top Surface Valve and Spark Switch 29
- Top of Surface Burner 29
- Bottom of Surface Burner 29
- Oven Sensor 30
- Convection Fan Assembly 30
- Bake Burner and Ignitor 30
- Broiler Burner and Ignitor 30
- Valve / Regulator Assembly 30
- Automatic Oven Door Latch Assembly 30
- Spark Module 30
- Door Plunger Light Switch 31
- Oven Door Removal 31
- Oven Door Hinge Receptacle 31
- Side Panel Removal 31
- Backguard 31
- Storage Drawer and Storage Drawer Panel Removal 31
- Storage Drawer Track Removal 32
- Oven Light Assembly 32
- Frameless Door Disassembly 32
- Power Cord 32

Appendix A
- Gas Conversion A-2
- Surface Burners to LP/Propane Gas A-3
- LP Gas Surface Burner Orifice Configuration A-4
- Natural Gas Surface Burner Orifice Configuration A-5
- Converting Bake Burner Orifice A-6
- Converting Broil Burner Orifice A-8
- Low Flow Conversion For Surface Burner Valves A-9

Safety Information

As with all appliances, there are certain rules to follow for safe operation. Verify everyone who operates the range is familiar with the operations and with these precautions.

Use appliance only for its intended purpose as described. Pay close attention to the safety sections of this manual.

Recognize the safety section by looking for the symbol or the word safety.

Recognize this symbol as a safety precaution.

WARNING

If the information in this manual is not followed exactly, a fire or explosion may result causing property damage, personal injury or death.

Do not store or use gasoline or other flammable vapors or liquids in the vicinity of this or any other appliance.

WHAT TO DO IF YOU SMELL GAS

- Extinguish any open flame.
- Do not try to light any appliance.
- Do not touch any electrical switch; do not use any phone in your building.
- Immediately call your gas supplier from a neighbor's phone. Follow the gas supplier's instructions.
- If you cannot reach your gas supplier, call the fire department.

Installation and service must be performed by an authorized installer, service agency or gas supplier.

WARNING

To avoid risk of electrical shock, property damage, personal injury or death; verify wiring is correct, if components were replaced. Verify proper and complete operation of unit after servicing.

WARNING

This gas appliance contains or produces a chemical or chemicals which are known to the state of California to cause cancer, birth defects or other reproductive harm. To reduce the risk from substances in the fuel or from fuel combustion make sure this appliance is installed, operated, and maintained according to the instructions in this manual.

Due to the nature of cooking, fires can occur as a result of overcooking or excessive grease. Although a fire is unlikely, if one occurs proceed as follows:

Oven Fires

1. Do not open the oven door.
2. Turn all controls to the OFF position.
3. As an added precaution turn off the electricity at the main circuit breaker or fuse box and the gas at the main supply valve.
4. Allow the food or grease to burn itself out in the oven.

If smoke or fire persist call the local fire department.

To avoid risk of property damage or personal injury do not obstruct the flow of combustion or ventilation air to the oven.

To avoid risk of electrical shock, serious personal injury or death: Verfiy the oven has been properly grounded and always disconnect the electrical supply before servicing this unit.

NOTE: The maximum gas supply pressure for these models must not exceed 14 inches W.C.P.

©2003 Maytag Appliances Company

Safety Information

Safety Practices for Servicer

Safe and satisfactory operation of gas ranges depends upon its design and proper installation. However, there is one more area of safety to be considered:

Servicing

Listed below are some general precautions and safety practices which should be followed in order to protect the service technician and consumer during service and after service has been completed.

1. **Gas smell**—Extinguish any and all open flames and open windows.
2. **Turn gas off**—Service range with gas turned off unless testing requires it.
3. **Checking for gas leaks**—Never check for leaks with any kind of open flame. Soap and water solution should be used for this purpose. Apply solution to suspected area and watch for air bubbles which indicates a leak. Correct leaks by tightening fittings, screws, connections, applying approved compound, or installing new parts.
4. **Using lights**—Use a hand flashlight when servicing ranges or checking for gas leaks. Electric switches should not be operated where leaks are suspected. This will avoid creating arcing or sparks which could ignite the gas. If electric lights are already turned on, they should not be turned off.
5. **Do not smoke**—Never smoke while servicing gas ranges, especially when working on piping that contains or has contained gas.
6. **Check range when service is completed**—After servicing, make visual checks on electrical connection, and check for gas leaks. Inform consumer of the condition of range before leaving.
7. **Adhere to all local regulations and codes when performing service.**

Receiving Range

- Installer needs to show consumer location of the range gas shut-off valve and how to shut it off.
- Authorized servicer must install the range, in accordance with the Installation Instructions. Adjustments and service should be performed only by authorized servicer.
- Plug range into a 120–volt grounded outlet only. Do not remove round grounding prong from the plug. If in doubt about grounding of the home electrical system, it is consumers responsibility and obligation to have an ungrounded outlet replaced with a properly grounded three-prong outlet in accordance with the National Electrical Code. Do not use an extension cord with this appliance.
- Insure all packing materials are removed from the range before operating it, to prevent fire or smoke damage should the packing material ignite.
- Ensure range is correctly adjusted by a qualified service technician or installer for the type of gas (Natural or LP). Some ranges can be converted for use with Natural or LP gas.
- With prolonged use of a range, high floor temperatures could result. Many floor coverings will not be able to withstand this kind of use. Never install range over vinyl tile or linoleum that cannot withstand high temperatures. Never install range directly over carpeting.

ALL APPLIANCES

1. Proper Installation—Be sure your appliance is properly installed and grounded by a qualified technician.
2. Never Use Appliance for Warming or Heating the Room.
3. Do Not Leave Children Alone—Children should not be alone or unattended in the area where the appliance is in use. They should never be allowed to sit or stand on any part of the appliance.
4. Wear Proper Apparel—Loose fitting or hanging garments should never be worn while using appliance.
5. User Servicing—Do not repair or replace any part of the appliance unless specifically recommended in the manual. All other servicing should be referred to a qualified technician.
6. Storage in or on Appliance—Flammable materials should not be stored in oven.
7. Do Not Use Water on Grease Fires—Smother fire or flame, or use dry chemical or foam-type extinguisher.
8. Use Only Dry Potholders—Moist or damp potholders on hot surfaces may result in burns from steam. Do not let potholder touch burners. Do not use a towel or other bulky cloth.

SELF-CLEANING OVEN

1. Do Not Clean Door Gasket—The door gasket is essential for a good seal. Care should be taken not to rub, damage, or move the gasket.
2. Do Not Use Oven Cleaners—No commercial oven cleaner or oven liner protective coating of any kind should be used in or around any part of the liner.
3. Clean Only Parts Listed in Manual. See *Cleaning* section.
4. Before Self-Cleaning the Oven—Remove broiler pan, oven racks, and other utensils.
5. Remove all items from oven top and backguard.

Safety Information

OVEN

1. Use Care When Opening Door—Let hot air or steam escape before removing or replacing food.
2. Do Not Heat Unopened Food Containers—Build-up of pressure may cause container to burst and result in injury.
3. Keep Oven Vents Ducts Unobstructed.
4. Placement of Oven Racks—Always place oven racks in desired location while oven is cool. If rack is removed while oven is hot, do not let potholder contact hot heating element in oven.

Delayed Ignition

Bake Burner Flame

Allow no more than 40–60 seconds before burner ignites and heat is felt. To check for heat, open oven door to first stop and place hand over oven door. If heat is not felt, cancel bake funtion. If burner repeatedly fails to ignite, contact an authorized servicer.

Broiler Flame

Allow no more than 40–60 seconds before burner ignites and flame is seen. If burner does not ignite cancel broil function. If burner repeatedly fails to ignite within 40–60 seconds contact an authorized servicer.

Radiant screen style broiler flame should appear hazy or fuzzy. Haze should be no more than $^{3}/_{8}$–inch thick. The radiant screen should begin to glow red within 1–2 minutes.

Precautions

- Do not mix household cleaning products. Chemical mixtures may interact with objectionable or even hazardous results.
- Do not put plastic items on warm cooking areas. They may stick and melt.
- Do not use damp sponge or dishcloth to clean oven when oven is hot. Steam from sponge or dishcloth can burn.
- Do not leave fat heating unless you remain nearby. Fat can ignite if overheated by spilling onto hot surfaces.

In Case of Fire

Fires can occur as a result of over cooking or excessive grease. Though a fire is unlikely, if one occurs, proceed as follows:

Oven Fires

1. If you see smoke from oven, do not open oven door.
2. Turn oven control to *OFF*.
3. As an added precaution, turn off gas supply and power at main circuit breaker or fuse box.
4. Turn on vent to remove smoke.
5. Allow food or grease to burn itself out in oven.
6. If smoke and fire persist, call fire department.
7. If there is any damage to components, call repair service before using oven.

If smoke or fire persist call the local fire department**.**

To avoid the risk of property damage or personal injury do not obstruct the flow of combustion or ventilation air to the oven.

To avoid the risk of electrical shock, serious personal injury or death: Make sure your oven has been properly grounded and always disconnect the electrical supply before servicing this unit.

NOTE: The maximum gas supply pressure for these models must not exceed 14 inches W.C.P.

Using the Oven

- Do not leave children alone or unattended where a range is hot or in operation. They could be seriously burned.
- Do not allow anyone to climb, stand or hang on the door. They could damage the range and cause severe personal injury.
- Wear proper apparel. Loose fitting or hanging garments should never be worn when using oven. Flammable material could ignite if brought in contact with flame or hot oven surfaces which may cause severe burns.
- Never use range for warming or heating a room. This may cause burns, injuries, or a fire.
- Do not use water on grease fires.
- Do not let grease or other flammable materials collect in or around range.
- Do not repair or replace any part of range unless it is recommended in this manual.
- Use only dry potholders. Moist or damp potholders used on hot surfaces may result in a burn from steam. Do not let a potholder touch the flame. Do not use a towel or a bulky cloth as a potholder.
- Never leave range unattended while cooking. Boilovers can cause smoking and may ignite.

©2003 Maytag Appliances Company

Safety Information

- Only certain types of glass/ceramic, earthenware, or other glazed utensils are suitable for oven use. Unsuitable utensils may break due to sudden temperature change.
- Use care when opening oven door. Let hot air or steam escape before removing or replacing food.
- Do not heat unopened food containers in oven. Build-up of pressure may cause a container to burst and result in injury.
- Keep range vent ducts unobstructed.
- Place oven racks in desired location while oven is cool. If a rack must be moved while oven is hot, use a dry potholder.
- Do not use aluminum foil to line oven bottom or racks. Aluminum foil can cause a fire and will seriously affect baking results, and damage to porcelain surfaces.
- Do not touch interior surfaces of oven during or immediately after use. Do not let clothing or other flammable materials come in contact with bake or broil burners.
- Other areas of the oven can become hot enough to cause burns, such as vent openings, window, oven door and oven racks.
- To avoid steam burns, do not use a wet sponge or cloth to wipe up spills on hot cooking area.
- Do not store combustible or flammable materials, such as gasoline or other flammable vapors and liquids near or in oven.
- Do not clean oven door gasket located on back of the door. Gasket is necessary to seal the oven and can be damaged as a result of rubbing or being moved.
- Do not drape towels or any materials on oven door handles. These items may ignite causing a fire.

⚠ CAUTION

Do not store items of interest to children in cabinets above range. Children may climb on oven to reach these items and become seriously injured.

Baking, Broiling, and Roasting

- Do not use oven area for storage.
- Stand back from range when opening door of a hot oven. Hot air or steam can cause burns to hands, face, and eyes.
- Do not use aluminum foil anywhere in the oven. This could result in a fire hazard and damage the range.
- Use only glass cookware appropriate for use in gas ovens.
- Always remove broiler pan from oven when finished broiling. Grease left in pan can catch fire if oven is used without removing grease from the broiler pan.
- When broiling, meat that is close to the flame, may ignite. Trim any excess fat to help prevent excessive flare-ups.
- Make sure broiler pan is placed correctly to reduce any possibility of grease fires.
- Should a grease fire occur in the broiler pan, turn off oven, and keep oven door closed until fire burns out.

Connecting Range to Gas

Install manual shut-off valve in gas line for easy accessibility outside range. Be aware of the location of the shut-off valve.

Safety Information

Electrical Requirements

120-volt, 60 Hertz, 15 amp, individual circuit which is properly grounded, polarized and protected by a circuit breaker or fuse.

Extension Cord

Due to possible pinching during installation, extension cords should not be used on products.

Extension cords will adversely affect the performance of spark system.

Grounding

NOTE: This appliance must be properly grounded, for personal safety.

Power cord on this appliance is equipped with a three-prong grounding plug. This matches standard three-prong grounding wall receptacle to prevent possibility of electric shock from this appliance.

Consumer should have wall receptacle and circuit checked by qualified electrician to verify receptacle is properly grounded.

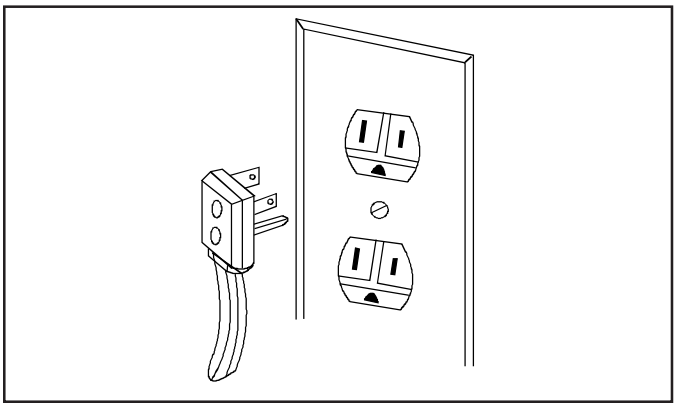

Where standard two-prong wall receptacle is encountered, it is consumers responsibility and obligation to have it replaced with a properly grounded three-prong wall receptacle.

DO NOT, UNDER ANY CIRCUMSTANCES, CUT OR REMOVE THE THIRD (GROUND) PRONG FROM POWER CORD.

For 15 amp circuits only. Do not use an adapter on 20 amp. circuit. Where local codes permit, a TEMPORARY CONNECTION may be made to properly grounded two-prong wall receptacle by the use of a UL listed adapter available at most hardware stores.

Larger slot on adapter must be aligned with larger slot in the wall receptacle to provide proper polarity.

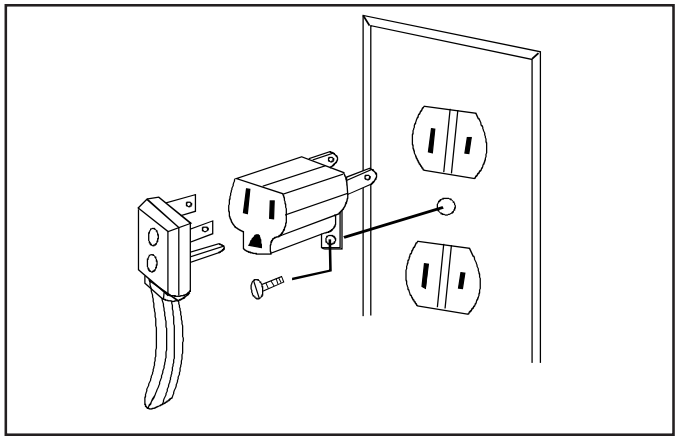

⚠ WARNING

Attaching adapter ground terminal to wall receptacle cover screw does not ground appliance unless the cover screw is metal and not insulated, and wall receptacle is grounded through the house wiring. Consumer should have circuit checked by a qualified electrician to verify receptacle is properly grounded.

When disconnecting power cord from adapter, always hold adapter with one hand. If this is not done, adapter ground terminal is very likely to break with repeated use. Should this happen, DO NOT USE appliance until a proper ground has been established.

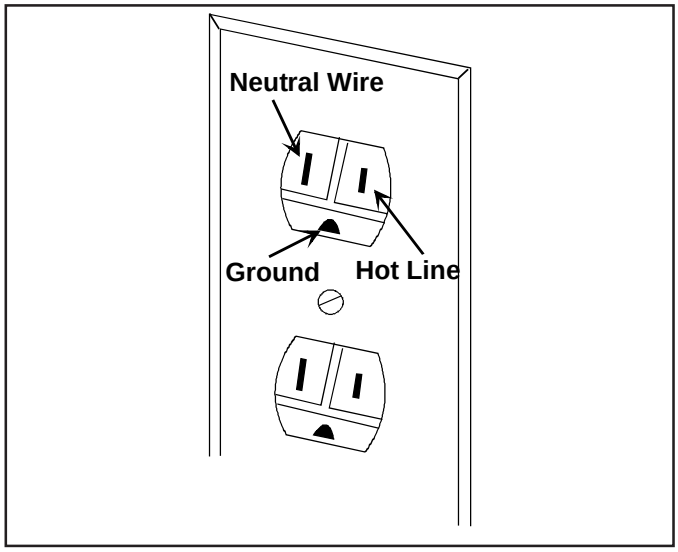

NOTE: Circuit tester can be use to verify voltage is present at the outlet, connect one lead to hot line and the other lead to ground, circuit tester should light.

©2003 Maytag Appliances Company

Safety Information

Product Safety Devices

Safety devices and features have been engineered into the product to protect consumer and servicer. Safety devices must never be removed, bypassed, or altered in such a manner as to defeat the purpose for which they were intended.

Listed below are various safety devices together with the reason each device is incorporated in the gas ranges.

Pressure Regulator	Maintains proper and steady gas pressure for operation of oven controls. Regulator must be set for the type of gas being used **Natural** or **LP.** After servicing regulator, make certain it is set properly before completing service.
Gas Burner Orifices	These products use a fixed orifice fitting that must be installed for **Natural** or **LP.** After servicing a valve or orifice verify it is properly operating before completing service.
Oven Safety Valve	Oven valve is designed to be a safety valve. Two basic designs are used in gas ranges. Hydraulic type valve Electric type valve Both types are safety valves because they are indirectly operated by the oven thermostat, which controls a pilot flame or electric ignitor, to open and close the oven valve. **These products use the Electric Type Valve.**
Grounded Oven Frame	Ground prong on power cord is connected to the frame, usually a green lead fastened by a screw. In addition, any part or component capable of conducting an electric current is grounded by its mounting. If any ground wire, screw, strap, nut, etc. is removed for service, or any reason, it must be reconnected to its original position with original fastener before the appliance is put into operation again. Failure to do so can create a possible shock hazard.

General Information

This manual provides basic instructions and suggestions for handling, installing , and servicing gas ranges.

The directions, information, and warnings in this manual are developed from experience with, and careful testing of the product. If the unit is installed according to the Installation Instructions, it will operate properly and will require minimal servicing. A unit in proper operating order ensures the consumer all the benefits provided by efficient gas cooking.

This manual contains information needed by authorized service technicians to install and service gas ranges pertaining to this manual. There maybe, however some information which needs further explanation. Refer to individual Installation Instructions, Use and Care, Technical Sheets, or toll free technical support line to answer questions from authorized service technicians.

Cooking Nomenclature

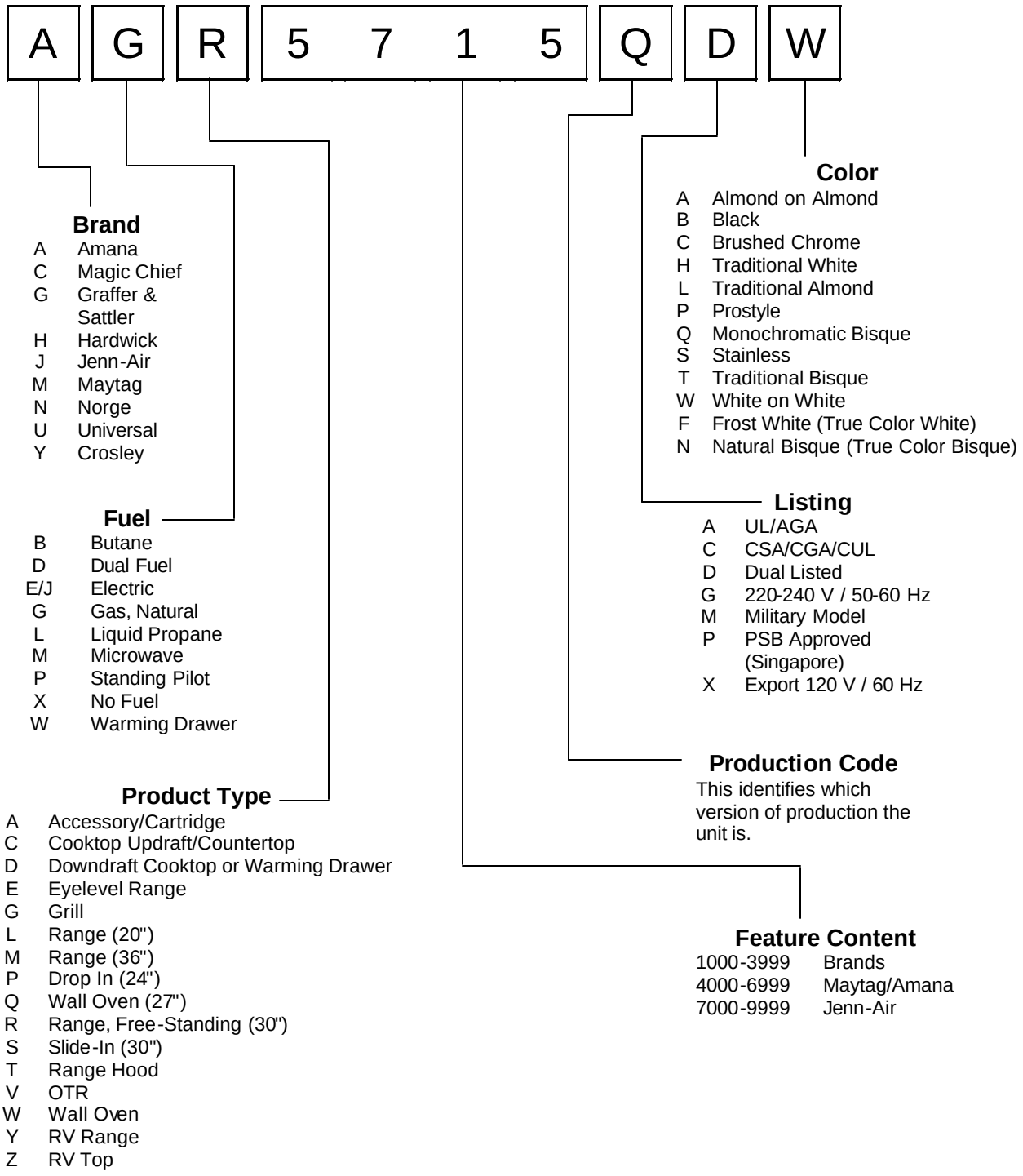

 ©2003 Maytag Appliances Company

General Information

Rating Label

Model numbers are recorded on the rating label. Rating label is located on the lower front right corner of the oven frame. It can be seen by opening the oven door. Before ordering parts, write down the correct model and serial number from rating label. This avoids incorrect shipments and delays. Please refer to parts reference material when ordering replacement parts.

Functional Operation

The glow bar system is completely reliant upon electricity. When the oven control is turned on, 120 VAC is provided to the glow bar ignitor and the gas valve circuit. The high resistances of the glow bar limits the current flow through the ignitor/gas valve. Continual current flow through the circuit causes the glow bar ignitor to glow brighter and the resistance of the ignitor decreases, which increases the current flow through the ignitor/gas valve circuit. This increases the amount of heat generated by the heater, which causes the bi-metal to bend.

At a point the ignitor resistance will have increased to approximately 3.5 amps of current flow through the ignitor/gas valve circuit. In approximately 45 seconds the glow bar ignitor temperature will have increased to approximately 2650°F. the voltage drop across the gas valve terminals will have increased to about 3 VAC, which will indicate enough current to flow to provide enough bi-metal heat to cause the gas valve to open providing gas flow to the oven burner the heat from the glow bar ignites the gas. The sensing element of the oven control then cycles contacts within the oven control, opening and closing to cycle the glow bar, safety valve, and burner to maintain the desired temperature.

NOTE: This system cannot operate without electricity.

The primary components of this ignition system are: electronic control, ignitor, and safety valve. These components are all wired in series and although the oven control and glow bar require 120 VAC, 60 Hz. The oven valve operates on approximately 3 volts.
Therefore, 120 VAC should never be applied directly to the oven valve terminals. The glow bar is the power source for the oven valve.

General Information

Specifications

Refer to individual Technical Sheet for information regarding specifications.

Model Identification

Complete registration card and promptly return. If registration card is missing:

- For Amana product call 1-800-843-0304 or visit the Web Site at www.amana.com
- For Maytag product call 1-800-688-9900 or visit the Web Site at www.maytag.com
- For Jenn-Air product call 1-800-536-6247 or visit the Web Site at www.jennair.com
- For product in Canada call 1-866-587-2002 or visit the Web Sites at www.amana.com or www.maytag.com or www.jennair.com

When contacting provide product information located on rating plate. Record the following:

Model Number: _____
Manufacturing Number: _____
Serial or S/N Number: _____
Date of purchase: _____
Dealer's name and address: _____

Service

Keep a copy of sales receipt for future reference or in case warranty service is required. To locate an authorized servicer:

- For Amana product call 1-800-628-5782 or visit the Web Site at www.amana.com
- For Maytag/Jenn-Air product call 1-800-462-9824 or visit the Web Site at www.maytag.com or www.jennair.com
- For product in Canada call 1-866-587-2002 or visit the Web Sites at www.amana.com or www.maytag.com or www.jennair.com

Warranty service must be performed by an authorized servicer. We also recommend contacting an authorized servicer, if service is required after warranty expires.

Parts and Accessories

Purchase replacement parts and accessories over the phone. To order accessories for your product call:

- For Amana product call 1-877-232-6771 or visit the Web Site at www.amana.com
- For Maytag/Jenn-Air product call 1-800-462-9824 or visit the Web Site at www.maytag.com or www.jennair.com
- For product in Canada call 1-866-587-2002 or visit the Web Sites at www.amana.com or www.maytag.com or www.jennair.com

Extended Service Plan

We offer long-term service protection for this new oven.

- Asure™ Extended Service Plan is specially designed to supplement Amana's strong warranty. This plan covers parts, labor, and travel charges.
  Call 1-866-232-6244 for information.
- Dependability Plus℠ Extended Service Plan is specially designed to supplement Maytag's and Jenn-Air's strong warranty. This plan covers parts, labor, and travel charges.
  Call 1-800-925-2020 for information.

©2003 Maytag Appliances Company

Troubleshooting Procedures

⚠ WARNING

To avoid risk of electrical shock, personal injury or death; disconnect power to oven before servicing, unless testing requires it.

Problem	Possible Cause	Correction
Burners will not ignite; no spark at top burner.	Poor ground on burner cap ..... Weak or failed spark module..... Low gas pressure	• Clean burner cap. • Replace spark module. • Verify pressure 4” WCP for natural, 10” WCP for LP.
Burner will not ignite. No spark to burner ignitors when burner knob is rotated to “LITE” position.	No 120 VAC to range ..... Micro switch contacts not closing..... Faulty wiring. Bad connection at burner electrode and electrode socket ..... Inoperative spark module..... Electrode dirty. Burner cap dirty..... Cracked or broken electrode, electrode wire or electrode socket	• Verify voltage at wall outlet. • Check wiring against appropriate wiring diagram, Verify all terminals and connections are correct and tight. Check micro switch contacts. • Check wiring against appropriate wiring diagram. Verify all terminals and connections are correct and tight. • Check module according to testing procedures information. • Clean electrode or burner cap. • Replace electrode.
No spark or only random spark at one ignitor.	Check for cracked ignitor or pinched ignitor wire ..... Poor continuity to burner cap ..... Bad ground connection or lack of continuity to ground or ignitor ..... Cracked or broken ignitor extension lead ...	• Replace ignitor lead or electrode. • Clean burner cap and lead. • Tighten ground connection and correct any breaks in ground path from ignitor path to unit ground path. • Replace ignitor lead.
Unit continues to spark after knob is turned to OFF position.	Shorted valve switch/harness ..... Switch has slipped off the valve	• Replace switch/harness. If shorting is caused by excessive spillovers, customer education is advised. • Carefully reposition switch on valve and rotate from OFF to high, several times to verify switch is not broken.
No oven operation in bake or broil.	No voltage to control. ..... No voltage from control ..... Loose wire connection or broken wire.....	• Check for 120 VAC at control. If no voltage check power source. • Check 120 VAC to ignitor, if no voltage, replace control. • Verify all connections are clean and tight, replace broken wire.

Troubleshooting Procedures

WARNING

To avoid risk of electrical shock, personal injury or death; disconnect power to oven before servicing, unless testing requires it.

Problem	Possible Cause	Correction
No gas flows to burner. Ignitor glows red.	Failed ignitor.	• Check ignitor current draw, 3.2 – 3.6 Amps. Replace ignitor, if it fails test.
	Gas pressure too high	• Check for correct gas pressure. Natural gas pressure should be 4" WCP and LP gas pressure should be 10" WCP.
	Failed gas valve	• Check gas valve for continuity.
	Loose wire connection or broken wire	• Verify all connections are clean and tight, replace broken wire.
Gas flows to bake/broil burner, but burner does not light.	Ignitor positioned too far from burner	• Reposition ignitor closer to bake/broil burner.
	Dirt or grease in orifice or burner	• Clean orifice or burner.
	Insufficient gas pressure	• Check for correct gas pressure. Natural gas pressure should be 4" WCP and LP gas pressure should be 10" WCP.
	Power outage	• Verify power is present at unit. Verify that the circuit breaker is not tripped. • Replace household fuse, but do not fuse capacity.
Broil burner shuts off shortly after the start of self-clean operation. Bake and broil functions operate normally.	Power outage	• Verify power is present at unit. Verify that the circuit breaker is not tripped. • Replace household fuse, but do not fuse capacity. • Refer to Use and Care Manual “Operating Instructions”, if continues contact service.
Fan motor does not operate.	No power to fan motor	• Check for 120 VAC supplied at fan motor. If no voltage is present, check for broken or loose wiring between fan motor and relay board. If voltage is present at fan motor, go to the next step.
	Failed fan motor or winding or frozen shaft.	• Check motor winding for continuity. Check for a frozen motor shaft. Check for broken wiring between motor and neutral terminal block.

©2003 Maytag Appliances Company

Troubleshooting Procedures

WARNING

To avoid risk of electrical shock, personal injury or death; disconnect power to oven before servicing, unless testing requires it.

Problem	Possible Cause	Correction
Oven light does not operate.	Failed oven lamp Failed wiring Failed light socket Failed light plunger/switch	• Check lamp and replace is necessary. • Check for broken, loose or dirty connections. • Check light socket for continuity. • Check plunger/switch for continuity. Check wiring diagram for application.
Self-clean cycle not working	Programming error	• Shut off power to oven for five minutes by switching off circuit breaker. Reset circuit breaker and try oven again.
Oven door will not unlock	Oven is self-cleaning Oven is still hot	• Allow cycle to complete. • Door will not unlock until unit has cooled to safe temperature. Do not force door open, this will void warranty. Blow cool air on door latch area to quicken process.
Oven smokes/odor first few times of usage	Normal	• Minor smoking and/or odor is normal the first few times of oven usage. • Ventilate area well and perform self-clean cycle.
Failure Codes	Electronically Controlled	• See Testing Procedures for diagnostic checks.

Testing Procedures

WARNING

To avoid risk of electrical shock, personal injury or death; disconnect power to oven before servicing, unless testing requires power.

Illustration	Component	Test Procedure	Results
	Oven light socket	Test continuity of receptacle terminals. Measure voltage at oven light.	Indicates continuity with bulb screwed in. 120 VAC, see wiring diagram for terminal identification. If no voltage is present at oven light check wiring.
	Door plunger switch	Remove switch from unit and measure the following points: C-NO	Plunger in continuity, Plunger out infinite.
	Rocker switch	Measure continuity of switch positions: Closed ..... Open	Continuity Infinite
	Door light switch	Switch connection in following positions: Not engaged Engaged	Normally Open COM-NO=Open, COM-NC=Closed COM-NO=Closed, COM-NC=Open
	Autolatch assembly with switch	Disconnect wires and test for continuity per wiring diagram.	See wiring diagram for schematic layout. Refer to Parts Manual for correct autolatch switch.
	Bake burner	Verify gas is supplied. Orifice adjusted for Natural or LP. Check for obstructions, contamination in ports or damage.	Clean with hot soapy water and dry completely. Replace if punctured or torn.
	Broil burner	Verify gas is supplied. Verify proper orifice installed for Natural or LP. Check for obstructions, contamination in ports or damage.	Clean with hot soapy water and dry completely. Replace if punctured or torn.
	Ignitor	Test for voltage at terminals ..... Test for the amount of amperage in the circuit..... (Ignitor may glow, but not have sufficient amperage to open valve).	120 VAC 3.2–3.6 Amps.
	Temperature sensor	Measure resistance.	Approximately 1100 Ω at room temperature 80°F.
	Convection motor fan	Verify supply voltage ..... Measure continuity at the following points: Terminal to terminal..... Terminal to ground	120 VAC Continuity Infinite
	Convection element	Test continuity of terminals..... Test voltage to terminals	Approximately 14 Ω - cold 120 VAC

©2003 Maytag Appliances Company

Testing Procedures

⚠ WARNING

To avoid risk of electrical shock, personal injury or death; disconnect power to oven before servicing, unless testing requires power.

Illustration	Component	Test Procedure	Results
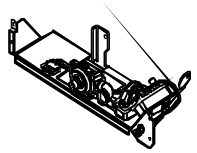	Pressure regulator	Verify gas pressure (WCP). If on LP service, verify proper gas supply conversion.	4" Natural 10" LP/Propane
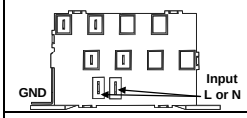	Spark module 4 + 0	Test for voltage at terminals L and N..... Polarity and ground	120 VAC Not subject to polarity
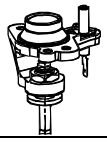	Holder orifice	Verify gas pressure (WCP). Check orifice for debris.	4" Natural 10" LP/Propane Clean as needed.
	Spark ignition electrode	Test for resistance of spark lead..... Test ignitor to chassis	Continuity No continuity from ignitor to chassis.
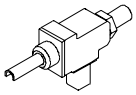	270° valve	Verify gas is supplied. Verify Orifice for Natural or LP. Adjust set screw for simmer control.	 Fixed orifices for Natural or LP. See conversion section.
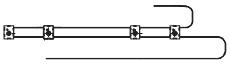	Spark 270° switch	Unplug switch harness at rear of range. Test for continuity at wire terminals. Switch in LITE position..... Switch in any other position.....	120 VAC Continuity Infinite
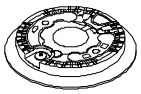	Top surface burner	Verify gas is supplied..... Verify burner cap is positioned correctly.	Check for obstructions in burner ports.

Testing Procedures

WARNING

To avoid risk of electrical shock, personal injury or death; disconnect power to oven before servicing, unless testing requires power.

Illustration	Test Procedure	Results		
Matrix Control Panel Assembly 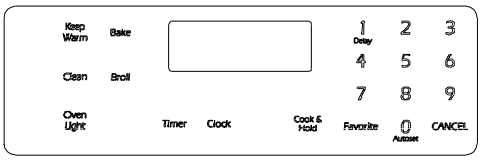 	Continuity is indicated as follows: 1000 – 6600 Ω for Cancel pad 1000 – 15000 Ω for All other pads 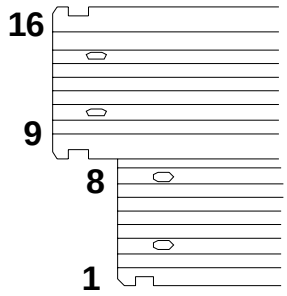 	**Pad**	**Trace**	**Measurement**
		1	13 & 15	Continuity
		2	12 & 15	Continuity
		3	10 & 15	Continuity
		4	7 & 13	Continuity
		5	12 & 13	Continuity
		6	10 & 12	Continuity
		7	4 & 13	Continuity
		8	4 & 12	Continuity
		9	4 & 10	Continuity
		0	5 & 12	Continuity
		Cancel	1 & 2	Continuity
		Clock	5 & 14	Continuity
		Cook & Hold	15 & 14	Continuity
		Broil	4 & 5	Continuity
		Bake	7 & 15	Continuity
		Clean	13 & 14	Continuity
		Keep Warm	7 & 14	Continuity
		Favorites	5 & 13	Continuity
		Timer	4 & 14	Continuity
		Light	12 & 11	Continuity
Matrix Control Panel Assembly 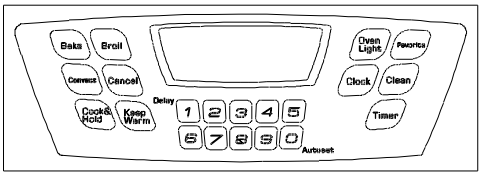 	Continuity is indicated as follows: 1000 – 6600 Ω for Cancel pad 1000 – 15000 Ω for All other pads 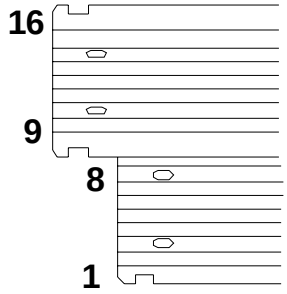 	**Pad**	**Trace**	**Measurement**
		1	5 & 14	Continuity
		2	4 & 14	Continuity
		3	4 & 13	Continuity
		4	4 & 12	Continuity
		5	4 & 10	Continuity
		6	13 & 14	Continuity
		7	4 & 5	Continuity
		8	5 & 13	Continuity
		9	5 & 12	Continuity
		0	5 & 10	Continuity
		Cancel	1 & 2	Continuity
		Clock	13 & 15	Continuity
		Cook & Hold	12 & 11	Continuity
		Broil	7 & 15	Continuity
		Bake	7 & 14	Continuity
		Convect	10 & 11	Continuity
		Clean	10 & 12	Continuity
		Keep Warm	4 & 7	Continuity
		Favorites	10 & 15	Continuity
		Timer	12 & 13	Continuity
		Light	12 & 15	Continuity

©2003 Maytag Appliances Company

Testing Procedures

⚠ WARNING

To avoid risk of electrical shock, personal injury or death; disconnect power to oven before servicing, unless testing requires power.

Illustration	Test Procedure	Results		
Matrix Control Panel Assembly 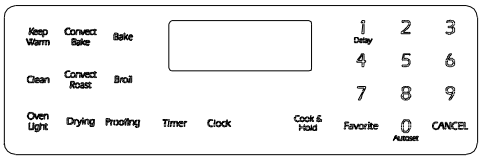 	Continuity is indicated as follows: 1000 – 6600 Ω for Cancel pad 1000 – 15000 Ω for All other pads 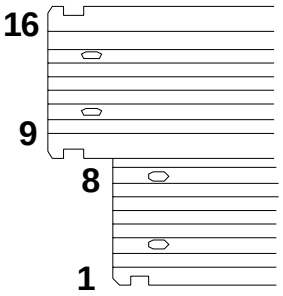 	**Pad**	**Trace**	**Measurement**
		1	13 & 15	Continuity
		2	12 & 15	Continuity
		3	10 & 15	Continuity
		4	7 & 13	Continuity
		5	12 & 13	Continuity
		6	10 & 12	Continuity
		7	4 & 13	Continuity
		8	4 & 12	Continuity
		9	4 & 10	Continuity
		0	5 & 12	Continuity
		Cancel	1 & 2	Continuity
		Convect Bake	7 & 11	Continuity
		Convect Roast	11 & 13	Continuity
		Keep Warm	4 & 7	Continuity
		Bake	7 & 15	Continuity
		Broil	4 & 5	Continuity
		Clean	5 & 7	Continuity
		Drying	11 & 12	Continuity
		Proofing	5 & 10	Continuity
		Timer	4 & 11	Continuity
		Clock	5 & 11	Continuity
		Cook & Hold	11 & 15	Continuity
		Favorite	5 & 13	Continuity
		Light	10 & 11	Continuity
Matrix Control Panel Assembly 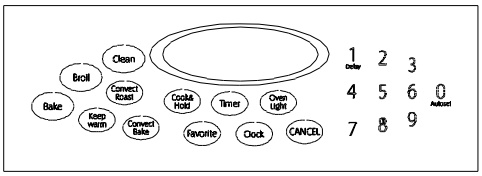 	Continuity is indicated as follows: 1000 – 6600 Ω for Cancel pad 1000 – 15000 Ω for All other pads 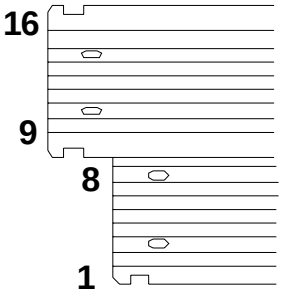 	**Pad**	**Trace**	**Measurement**
		1	13 & 15	Continuity
		2	12 & 13	Continuity
		3	12 & 15	Continuity
		4	4 & 11	Continuity
		5	4 & 12	Continuity
		6	4 & 10	Continuity
		7	5 & 13	Continuity
		8	5 & 12	Continuity
		9	5 & 10	Continuity
		0	10 & 12	Continuity
		Cancel	1 & 2	Continuity
		Clock	4 & 5	Continuity
		Cook & Hold	4 & 7	Continuity
		Broil	5 & 7	Continuity
		Bake	10 & 11	Continuity
		CV Bake	4 & 13	Continuity
		CV Roast	7 & 11	Continuity
		Clean	7 & 15	Continuity
		Keep Warm	11 & 12	Continuity
		Favorites	13 & 14	Continuity
		Timer	5 & 11	Continuity
		Light	7 & 13	Continuity

Testing Procedures

WARNING

To avoid risk of electrical shock, personal injury or death; disconnect power to oven before servicing, unless testing requires power.

Illustration	Component	Test Procedure	Results
H1 Controlled	Oven temperature adjustment	Press ***BAKE*** pad. Enter ***550*** on the digit-pad. Immediately press and hold ***BAKE*** pad for 3 seconds. Oven can be adjusted from -35 to +35 degrees in 5-degree increments by pressing ***AUTOSET*** pad. To avoid over adjusting the oven, move temperature 5 degrees each time. Wait 4 seconds for the data entry timer to expire to accept the change. Temperature adjustment will be retained even through a power failure.	While increasing or decreasing oven temperature, this does not affect self-cleaning temperature.
H1 Controlled	Temperature display	Press and hold ***Cancel*** and ***Bake*** pads for 3 seconds.	This mode enables the user to indicate °F or °C on the display.
H1 Controlled	Clock Display	Press and hold ***Cancel*** and ***Clock*** pads for 3 seconds.	Allows clock to be toggled On or OFF.
H1 Controlled	24 Hour Clock	Press and hold ***Cancel*** and ***Favorite*** pads for 3 seconds.	Allows the time on the clock to be toggled from 12 hour or 24 hour display.
H1 Controlled	Factory Default	Press and hold ***Cancel*** and ***Keep Warm*** pads for 3 seconds.	Allows the clock to be reset to factory settings.
H1 Controlled	Twelve hour off	Control will automatically cancel any cooking operation and remove all relay drives 12 hours after the last pad touch.	See Sabbath mode to disable.
H1 Controlled	Sabbath Mode	Hold ***CLOCK*** pad for 3 seconds to activate Sabbath mode. Hold ***CLOCK*** pad for 3 seconds to disable Sabbath mode.	"SAb" will be displayed and flash for 5 seconds. Display will go back to time of day. All pad inputs are disabled except for CANCEL and CLOCK pads. This mode disables the normal 12 hour shutoff to allow operation of the bake mode for a maximum of 72 hours.
H1 Controlled	Child lock out	Press and hold ***Cancel*** and ***Cook & Hold*** pads for 3 seconds. **"OFF"** will display where the temperature normally appears. "**LOCK**" will display flashing while door is locking. To reactivate the control, press and hold ***Cancel*** and ***Cook & Hold*** pads for 3 seconds.	This is a safety feature that can be used to prevent children from accidentally programming the oven. It disables the electronic oven control. Child lockout features must be reset after a power failure.
H1 Controlled	Diagnostic Code Display	See "Quick Test Mode". Cycle through the codes using the number pads 1 through 5.	The last 5 diagnostic codes will be stored in the non-volatile memory. See **"Description of Error Codes"** for explanation.

©2003 Maytag Appliances Company

Testing Procedures

⚠ WARNING

To avoid risk of electrical shock, personal injury or death; disconnect power to oven before servicing, unless testing requires power.

"Quick Test" Mode for Electronic Range Control

Follow procedure below to use the quick test mode. Entries must be made within 32 seconds of each other or the control will exit the quick test mode.

1. **Press and hold** *CANCEL* and *BROIL* pads for 3 seconds.
2. Once the control has entered the "Quick Test" mode, release both pads.
3. Press each of the following pads indicated in the table below.

NOTE: First time one of following pads are pressed it will activate the response.
The second time the pad is pressed it will deactivate the response.

Display will indicate the following:

Pad	Response
BAKE	Bake DLB and Bake relay activated
BROIL	Broil DLB and Broil relay activated
KEEP WARM	Bake DLB and Broil DLB activated
CONVECT BAKE	Convection Fan on high speed
CONVECT ROAST	Cooling Fan activated
CLEAN	MDL relay activated
COOK & HOLD	Displays last diagnostic code
FAVORITE	Displays EEPROM version number
TIMER	Displays main code version number
CLOCK	All display segments illuminated
OVEN LIGHT	Oven light activated
CANCEL	Exit Quick Test mode
1	Even segments on
2	Odd segments on
3	Convection Ring activated; Convection Ring DLB activated
4	Bake relay activated
5	Broil relay activated
6	Convection relay activated
7	N/A
8	N/A
9	N/A
AUTOSET	Steps through last 5 diagnostic codes

Description of Error Codes

Error diagnostic codes can only be viewed by entering the Diagnostic Code Display Mode.
Each error code is four digits long and is created based on the following table.

Digit	Description	
1st	Primary System:	1 – Local to the control circuit board 3 – Sensor or meat probe 4 – Control input 9 – Door lock
2nd	Measurable:	d – Diagnostic: measurable parameter c – Control related, replace control
3rd	Secondary System:	Sequential numbering
4th	Oven Cavity:	1 – Upper oven (or single cavity oven) 2 – Lower oven c – Control specific

Diagnostic Code Display Mode can be activated by **pressing and holding** the *AUTOSET* pad for 3 seconds at power-up. **Diagnostic Code Display Mode can only be started while powering up the control.**

Testing Procedures

WARNING

To avoid risk of electrical shock, personal injury or death; disconnect power to oven before servicing, unless testing requires power.

Diagnostic Code Checking

Code	Description	When Checked	Detection
1c1c	Shorted key	Always	1 minute
1c2c	Keyboard tail disconnected	Always	1 minute
1c31	Cancel key circuit problem	Always	20 seconds
1c32	Cancel key circuit problem	Always	20 seconds
1c6c	EEPROM error	When accessing EEPROM	3 tries
1c7c	Control not calibrated	Always	3 tries
1c8c	Cooking program error	Cook or clean programmed	3 tries
1d11	Runaway temp (650°F), door unlocked	Latch unlocked	1 minute
1d12	Runaway temp (650°F), door unlocked	Latch unlocked	1 minute
1d21	Runaway temp (950°F), door locked	Latch locked	1 minute
1d22	Runaway temp (950°F), door locked	Latch locked	1 minute
3d11	Sensor open	Cook or clean active	20 seconds
3d12	Sensor open	Cook or clean active	20 seconds
3d21	Sensor shorted	Cook or clean active	20 seconds
3d22	Sensor shorted	Cook or clean active	20 seconds
4d11	Door switch position failure	Clean or keyboard Lockout active	1 minute
4d12	Door switch position failure	Clean or keyboard Lockout active	1 minute
4d21	No reverse airflow fan rotation (no/low RPM)	Clean or Cook programmed	1 minute
4d31	Reverse airflow fan state (on when should be off)	Suppose to be OFF	1 minute
4d51	Door switch circuit failure	Convect, Clean or Keyboard Lockout programmed	1 minute
4d52	Door switch circuit failure	Convect, Clean or Keyboard Lockout programmed	1 minute
9d11	Latch will not lock	Latch should be locked	See Note [6]
9d12	Latch will not lock	Latch should be locked	See Note [6]
9d21	Latch will not unlock	Latch should be unlocked	See Note [6]
9d22	Latch will not unlock	Latch should be unlocked	See Note [6]
9d31	Latch state unknown, both locked and unlocked	Latch should be locked or when lock attempted	See Note [6]
9d32	Latch state unknown, both locked and unlocked	Latch should be locked or when lock attempted	See Note [6]

Diagnostic Code Handling

Code	Measurable	What is Displayed	Action Taken By Control
1c1c	Keypress	Nothing	Disables audible for affected key depression Disables all outputs [1, 2] Disables lights and timers
1c2c	Keyboard loop improper value	Nothing	Disables audible for key depression Disables all outputs [1] Disables lights and timers
1c31	Cancel key improper value	BAKE flashes [3]	Disables all outputs for cavity [1]
1c32	Cancel key improper value	BAKE flashes [3]	Disables all outputs for cavity [1]
1c6c	No response from EEPROM	Nothing	Disables all outputs [1]
1c7c	Calibration value out of range	"CAL" in the time digits	Completely disables oven [4]
1c8c	CRC invalid	Nothing	Cancels active cook function
1d11	Sensor resistance > 2237 Ohms	BAKE flashes [3]	Disables all cook function for cavity
1d12	Sensor resistance > 2237 Ohms	BAKE flashes [3]	Disables all cook function for cavity
1d21	Sensor resistance > 2787 Ohms	BAKE flashes [3]	Disables all cook function for cavity
1d22	Sensor resistance > 2787 Ohms	BAKE flashes [3]	Disables all cook function for cavity
3d11	Sensor resistance > Infinite Ohms	BAKE flashes [3]	Disables all cook function for cavity
3d12	Sensor resistance > Infinite Ohms	BAKE flashes [3]	Disables all cook function for cavity
3d21	Sensor resistance > 0 Ohms	BAKE flashes [3]	Disables all cook function for cavity
3d22	Sensor resistance > 0 Ohms	BAKE flashes [3]	Disables all cook function for cavity
4d11	Door switch not closed when door is locked	Nothing	Disables Clean and Lockout functions [5]
4d12	Door switch not closed when door is locked	Nothing	Disables Clean and Lockout functions [5]
4d21	No reverse airflow fan rotation (no/low RPM)	Nothing	Disables all cook function for cavity
4d31	Reverse airflow fan state (on when should be off)	Nothing	No action
4d51	Door switch not open or closed	Nothing	Disables Convect, Clean, and Lockout functions [4, 5] Turn off light and disable light from door switch
4d52	Door switch not open or closed	Nothing	Disables Convect, Clean, and Lockout functions [4, 5] Turn off light and disable light from door switch
9d11	Lock switch not closed	LOCK flashes [3]	Disables Clean and Lockout functions [4]
9d12	Lock switch not closed	LOCK flashes [3]	Disables Clean and Lockout functions [4]
9d21	Unlock switch not closed	LOCK flashes [3]	Disables Clean and Lockout functions [4]
9d22	Unlock switch not closed	LOCK flashes [3]	Disables Clean and Lockout functions [4]
9d31	Latch both locked and unlocked	LOCK flashes [3]	Disables Clean and Lockout functions [4]
9d32	Latch both locked and unlocked	LOCK flashes [3]	Disables Clean and Lockout functions [4]

©2003 Maytag Appliances Company

Testing Procedures

WARNING

To avoid risk of electrical shock, personal injury or death; disconnect power to oven before servicing, unless testing requires power.

NOTES:

1 "Action Taken" applies as long as the condition exists. If the condition goes away, the control recovers.

2 If there is a cook function or timer active, the function continues. The user cannot edit the function, and [Cancel] will cancel the cook mode.

3 Flash rate: 0.2 seconds on, 0.1 second off. Pressing any key will clear the display until the fault clears and is re-triggered.

4 "Action Taken" applies until there is a POR (Power On Reset ["hard reset"]).

5 If the control believes the door is locked, it will attempt to unlock it when the function cancels and the cavity temperature cools.

6 Special conditions for latch faults (9dxx):

- A known good **unlock** position is defined as when the unlock switch reads closed and lock switch reads open.
- A known good **lock** position is defined as when the unlock switch reads open and lock switch reads closed.
- A **faulted switch** means the switch input is reading an invalid state, neither open nor closed.
- Once a latch fault occurs, latch movement is disabled until there is a POR. An error tone will sound if a function requiring a faulted latch is attempted.
- If at POR, the latch is not at a known good unlock position:
  - If the latch is at a good lock position, it will attempt to unlock when the RTD (Resistance Temperature Device) temperature is below 400°F.
  - If the latch is not at a good lock position, the control will fault.
- If a latch fault occurs while the RTD is above the lock temperature, the latch will not try to move, but the fault is still logged to EEPROM after the first stage of detection.
- The Display column for latch faults applies 1) If the latch was moving when the fault occurred; 2) If the latch is already in a known locked state when the fault occurs.
  - LOCK flashes after a fault is detected and until the unlocked position is achieved. The unlock position may be identified by a successful unlock switch closure, or as the result of timing when the unlock switch is not functioning properly.
- If the last known good position was unlock (e.g. baking, or idle) and a latch fault occurs, the motor is never moved. The fault is logged to EEPROM and is not seen by the user.
- The detection for latch faults is in two stages. The first stage is to let the control recover without moving the latch. After this:
  - If the latch was previously at a known good unlock position, the latch will not move and the control will fault.
  - If the control was previously in a known good lock position:
    - If the RTD is below 400°F, the latch will attempt to recover to it's proper position (up to three revolutions). If it cannot, the control will fault and the latch will move to a calculated unlock position.
    - If the RTD is at or above 400°F, the control will fault. When the RTD cools to below 400°F, the control will attempt to recover to a good unlock position (up to three revolution). If it cannot, the control will fault and the latch will move to a calculated unlock position.
    - **Note:** If the unlock position cannot be found, this may result in a second fault, the first fault occurring when the latch request was locked, and the second when the latch request is unlocked.
  - If the latch is moving when the fault occurs, the control will bypass the first stage of detection and immediately try to find it's proper position. If it cannot, the control will fault and the latch will move to a calculated unlock position.
- Affected DLBs (Double Line Breaks) and loads are disabled during detection.
- If the control is in a known good unlock position and the lock switch becomes faulted:
  - The control will not fault.
  - If a function requiring latch movement is attempted while the lock switch is faulted, the control will sound an error tone and the function will be disabled.
- If the control is in a known good lock position and the unlock switch becomes faulted:
  - The control will not fault.
  - After the function is canceled and unlock is attempted, the control will attempt to unlock the latch according to the procedures in these notes.

Testing Procedures

WARNING

To avoid risk of electrical shock, personal injury or death; disconnect power to oven before servicing, unless testing requires power.

Illustration	Component	Test Procedure	Results
M1 Controlled	Oven temperature adjustment	Press ***BAKE*** pad. Enter ***550*** on the digit-pad. Immediately press and hold ***BAKE*** pad for 3 seconds. Oven can be adjusted from -35 to +35 degrees in 5-degree increments by pressing ***AUTOSET*** pad. To avoid over adjusting the oven, move temperature 5 degrees each time. Wait 4 seconds for the data entry timer to expire to accept the change. Temperature adjustment will be retained even through a power failure.	While increasing or decreasing oven temperature, this does not affect self-cleaning temperature.
M1 Controlled	Temperature display	Press and hold ***Cancel*** and ***Bake*** pads for 3 seconds.	This mode enables the user to indicate °F or °C on the display.
M1 Controlled	Clock Display	Press and hold ***Cancel*** and ***Clock*** pads for 3 seconds.	Allows clock to be toggled On or OFF.
M1 Controlled	24 Hour Clock	Press and hold ***Cancel*** and ***Delay*** pads for 3 seconds.	Allows the time on the clock to be toggled from 12 hour or 24 hour display.
M1 Controlled	Factory Default	Press and hold ***Cancel*** and ***Keep Warm*** pads for 3 seconds.	Allows the clock to be reset to factory settings.
M1 Controlled	Twelve hour off	Control will automatically cancel any cooking operation and remove all relay drives 12 hours after the last pad touch.	See Sabbath mode to disable.
M1 Controlled	Sabbath Mode	Hold ***CLOCK*** pad for 3 seconds to activate Sabbath mode. Hold ***CLOCK*** pad for 3 seconds to disable Sabbath mode.	"SAb" will be displayed and flash for 5 seconds. Display will go back to time of day. All pad inputs are disabled except for CANCEL and CLOCK pads. This mode disables the normal 12 hour shutoff to allow operation of the bake mode for a maximum of 72 hours.
M1 Controlled	Child lock out	Press and hold ***Cancel*** and ***Cook & Hold*** pads for 3 seconds. **"OFF"** will display where the temperature normally appears. "**LOCK**" will display flashing while door is locking. To reactivate the control, press and hold ***Cancel*** and ***Cook & Hold*** pads for 3 seconds.	This is a safety feature that can be used to prevent children from accidentally programming the oven. It disables the electronic oven control. Child lockout features must be reset after a power failure.
M1 Controlled	Diagnostic Code Display	Press and hold ***Up Arrow*** pad and ***Power Up*** the unit. Cycle through the codes using the number pads 1 through 5.	The last 5 diagnostic codes will be stored in the non-volatile memory. See **"Description of Error Codes"** for explanation.

©2003 Maytag Appliances Company

Testing Procedures

WARNING

To avoid risk of electrical shock, personal injury or death; disconnect power to oven before servicing, unless testing requires power.

Illustration	Component	Test Procedure	Results
M2 Controlled	Oven temperature adjustment	Press ***BAKE*** pad. Enter ***550*** on the digit-pad. Immediately press and hold ***BAKE*** pad for 3 seconds. Oven can be adjusted from -35 to +35 degrees in 5-degree increments by pressing ***AUTOSET*** pad. To avoid over adjusting the oven, move temperature 5 degrees each time. Wait 4 seconds for the data entry timer to expire to accept the change. Temperature adjustment will be retained even through a power failure.	While increasing or decreasing oven temperature, this does not affect self-cleaning temperature.
M2 Controlled	Temperature display	Press and hold ***Cancel*** and ***Bake*** pads for 3 seconds.	This mode enables the user to indicate °F or °C on the display.
M2 Controlled	Clock Display	Press and hold ***Cancel*** and ***Clock*** pads for 3 seconds.	Allows clock to be toggled On or OFF.
M2 Controlled	24 Hour Clock	Press and hold ***Cancel*** and ***Favorite*** pads for 3 seconds.	Allows the time on the clock to be toggled from 12 hour or 24 hour display.
M2 Controlled	Factory Default	Press and hold ***Cancel*** and ***Keep Warm*** pads for 3 seconds.	Allows the clock to be reset to factory settings.
M2 Controlled	Twelve hour off	Control will automatically cancel any cooking operation and remove all relay drives 12 hours after the last pad touch.	See Sabbath mode to disable.
M2 Controlled	Sabbath Mode	Hold ***CLOCK*** pad for 3 seconds to activate Sabbath mode. Hold ***CLOCK*** pad for 3 seconds to disable Sabbath mode.	"SAb" will be displayed and flash for 5 seconds. Display will go back to time of day. All pad inputs are disabled except for CANCEL and CLOCK pads. This mode disables the normal 12 hour shutoff to allow operation of the bake mode for a maximum of 72 hours.
M2 Controlled	Child lock out	Press and hold ***Cancel*** and ***Cook & Hold*** pads for 3 seconds. **"OFF"** will display where the temperature normally appears. "**LOCK**" will display flashing while door is locking. To reactivate the control, press and hold ***Cancel*** and ***Cook & Hold*** pads for 3 seconds.	This is a safety feature that can be used to prevent children from accidentally programming the oven. It disables the electronic oven control. Child lockout features must be reset after a power failure.
M2 Controlled	Diagnostic Code Display	Press and hold ***Up Arrow*** pad and ***Power Up*** the unit. Cycle through the codes using the number pads 1 through 5.	The last 5 diagnostic codes will be stored in the non-volatile memory. See **"Description of Error Codes"** for explanation.

Testing Procedures

⚠ WARNING

To avoid risk of electrical shock, personal injury or death; disconnect power to oven before servicing, unless testing requires power.

"Quick Test" Mode for Electronic Range Control

Follow procedure below to use the quick test mode. Entries must be made within 32 seconds of each other or the control will exit the quick test mode.

1. **Press and hold** *CANCEL* and *BROIL* pads for 3 seconds.
2. Once the control has entered the "Quick Test" mode, release both pads.
3. Press each of the following pads indicated in the table below.

NOTE: First time one of following pads are pressed it will activate the response.
The second time the pad is pressed it will deactivate the response.

NOTE: This mode can only be entered within the first 5 minutes after power up.

NOTE: If the temperature sensor is greater than 400°F and the Quick Test mode will be disabled if the temperature sensor reaches 400°F while under test.

Display will indicate the following:

Key	Operation
[Bake]	**Bake** relay activated, **DLB** relay activated
[Broil]	**Broil** relay activated, **DLB** relay activated
[Keep Warm]	**DLB** relay activated
[Cook&Hold]	Last Diagnostic Code displayed
[Clean]	**MDL** relay activated (lock and unlock)
[Delay] (M1)	**EEPROM Version Number** displayed
[Favorite] (M2)	**EEPROM Version Number** displayed
[Timer]	**Main Code Version Number** displayed
[Clock]	**All Segments** On
[More +]	**Even Segments** On
[Less –]	**Odd Segments** On
[Cancel]	End Factory Test Mode

Description of Error Codes

Error diagnostic codes can only be viewed by entering the Diagnostic Code Display Mode.
Each error code is four digits long and is created based on the following table.

Digit	Description	
1st	Primary System:	1 – Local to the control circuit board 3 – Sensor or meat probe 4 – Control input 9 – Door lock
2nd	Measurable:	d – Diagnostic: measurable parameter c – Control related, replace control
3rd	Secondary System:	Sequential numbering
4th	Oven Cavity:	1 – Upper oven (or single cavity oven) 2 – Lower oven c – Control specific

Diagnostic Code Display Mode can be activated by **pressing and holding** the *AUTOSET* pad for 3 seconds at power-up. **Diagnostic Code Display Mode can only be started while powering up the control.**

©2003 Maytag Appliances Company

Testing Procedures

WARNING

To avoid risk of electrical shock, personal injury or death; disconnect power to oven before servicing, unless testing requires power.

Diagnostic Code Checking

Code	Description	When Checked	Detection
1c1c	Shorted key	Always	1 minute
1c2c	Keyboard tail disconnected	Always	1 minute
1c31	Cancel key circuit problem	Always	20 seconds
1c6c	EEPROM error	When accessing EEPROM	3 tries
1c7c	Control not calibrated	Always	3 tries
1c8c	Cooking program error	Cook or clean programmed	3 tries
1d11	Runaway temp (650°F), door unlocked	Latch unlocked	1 minute
1d21	Runaway temp (950°F), door locked	Latch locked	1 minute
3d11	Sensor open	Cook or clean active	20 seconds
3d21	Sensor shorted	Cook or clean active	20 seconds
4d11	Door switch position failure	Clean or keyboard Lockout active	1 minute
4d51	Door switch circuit failure	Convect, Clean or Keyboard Lockout programmed	1 minute
9d11	Latch will not lock	Latch should be locked	See Note 6
9d21	Latch will not unlock	Latch should be unlocked	See Note 6
9d31	Latch state unknown, both locked and unlocked	Latch should be locked or when lock attempted	See Note 6

Diagnostic Code Handling

Code	Measurable	What is Displayed	Action Taken By Control
1c1c	Keypress	Nothing	Disables audible for affected key depression Disables all outputs [1, 2] Disables lights and timers
1c2c	Keyboard loop improper value	Nothing	Disables audible for key depression Disables all outputs [1] Disables lights and timers
1c31	Cancel key improper value	BAKE flashes [3]	Disables all outputs for cavity [1]
1c6c	No response from EEPROM	Nothing	Disables all outputs [1]
1c7c	Calibration value out of range	“CAL” in the time digits	Completely disables oven [4]
1c8c	CRC invalid	Nothing	Cancels active cook function
1d11	Sensor resistance > 2237 Ohms	BAKE flashes [3]	Disables all cook function for cavity
1d21	Sensor resistance > 2787 Ohms	BAKE flashes [3]	Disables all cook function for cavity
3d11	Sensor resistance > Infinite Ohms	BAKE flashes [3]	Disables all cook function for cavity
3d21	Sensor resistance > 0 Ohms	BAKE flashes [3]	Disables all cook function for cavity
4d11	Door switch not closed when door is locked	Nothing	Disables Clean and Lockout functions [5]
4d51	Door switch not open or closed	Nothing	Disables Convect, Clean, and Lockout functions [4, 5] Turn off light and disable light from door switch
9d11	Lock switch not closed	LOCK flashes [3]	Disables Clean and Lockout functions [4]
9d21	Unlock switch not closed	LOCK flashes [3]	Disables Clean and Lockout functions [4]
9d31	Lock and unlock switches both closed	LOCK flashes [3]	Disables Clean and Lockout functions [4]

Testing Procedures

WARNING

To avoid risk of electrical shock, personal injury or death; disconnect power to oven before servicing, unless testing requires power.

NOTES:

1 "Action Taken" applies as long as the condition exists. If the condition goes away, the control recovers.

2 If there is a cook function or timer active, the function continues. The user cannot edit the function, and [Cancel] will cancel the cook mode.

3 Flash rate: 0.2 seconds on, 0.1 second off. Pressing any key will clear the display until the fault clears and is re-triggered.

4 "Action Taken" applies until there is a POR (Power On Reset ["hard reset"]).

5 If the control believes the door is locked, it will attempt to unlock it when the function cancels and the cavity temperature cools.

6 Special conditions for latch faults (9dxx):

- A known good **unlock** position is defined as when the unlock switch reads closed and lock switch reads open.
- A known good **lock** position is defined as when the unlock switch reads open and lock switch reads closed.
- A **faulted switch** means the switch input is reading an invalid state, neither open nor closed.
- Once a latch fault occurs, latch movement is disabled until there is a POR. An error tone will sound if a function requiring a faulted latch is attempted.
- If at POR, the latch is not at a known good unlock position:
  - If the latch is at a good lock position, it will attempt to unlock when the RTD (Resistance Temperature Device) temperature is below 400°F.
  - If the latch is not at a good lock position, the control will fault.
- If a latch fault occurs while the RTD is above the lock temperature, the latch will not try to move, but the fault is still logged to EEPROM after the first stage of detection.
- The Display column for latch faults applies 1) If the latch was moving when the fault occurred; 2) If the latch is already in a known locked state when the fault occurs.
  - LOCK flashes after a fault is detected and until the unlocked position is achieved. The unlock position may be identified by a successful unlock switch closure, or as the result of timing when the unlock switch is not functioning properly.
- If the last known good position was unlock (e.g. baking, or idle) and a latch fault occurs, the motor is never moved. The fault is logged to EEPROM and is not seen by the user.
- The detection for latch faults is in two stages. The first stage is to let the control recover without moving the latch. After this:
  - If the latch was previously at a known good unlock position, the latch will not move and the control will fault.
  - If the control was previously in a known good lock position:
    - If the RTD is below 400°F, the latch will attempt to recover to it's proper position (up to three revolutions). If it cannot, the control will fault and the latch will move to a calculated unlock position.
    - If the RTD is at or above 400°F, the control will fault. When the RTD cools to below 400°F, the control will attempt to recover to a good unlock position (up to three revolutions). If it cannot, the control will fault and the latch will move to a calculated unlock position.
    - **Note:** If the unlock position cannot be found, this may result in a second fault, the first fault occurring when the latch request was locked, and the second when the latch request is unlocked.
  - If the latch is moving when the fault occurs, the control will bypass the first stage of detection and immediately try to find it's proper position. If it cannot, the control will fault and the latch will move to a calculated unlock position.
- Affected DLBs (Double Line Breaks) and loads are disabled during detection.
- If the control is in a known good unlock position and the lock switch becomes faulted:
  - The control will not fault.
  - If a function requiring latch movement is attempted while the lock switch is faulted, the control will sound an error tone and the function will be disabled.
- If the control is in a known good lock position and the unlock switch becomes faulted:
  - The control will not fault.
  - After the function is canceled and unlock is attempted, the control will attempt to unlock the latch according to the procedures in these notes.

 ©2003 Maytag Appliances Company

Disassembly Procedures

⚠ WARNING To avoid risk of electrical shock, personal injury, or death: disconnect electrical and gas supply before servicing.

Removing and Replacing Range

1. Turn off power to the range at the circuit breaker.
2. Turn off gas supply line to unit.
3. Pull the range forward out of the cabinet opening.
4. Unplug the power cord leading from unit to outlet.
5. Replace the range using the installation instructions and anti-tip bracket(s).

Front Control Panel

1. Open or remove oven door from unit.
2. Remove control knobs from gas valves, by pulling.
3. Remove screws securing front control panel, located on the bottom edge of the front control panel.
4. Remove control panel by sliding one way or the other and pulling away from the unit.
5. Reverse procedure to reassemble.

Maintop Assembly

1. Turn power off to unit.
2. Remove front control panel, see "Front Control Panel" procedure.
3. Remove grates and caps.
4. Remove screws securing top surface burner to maintop.
5. Lift surface burner off.
6. Raise the front edge of the maintop and pull forward.
7. Lift maintop assembly from the oven chassis.
8. Reverse procedure to reinstall maintop assembly.

Control Panel

1. Remove maintop assembly, see "Maintop Assembly" procedure, steps 1 through 7.
2. Remove screws securing control panel heat shield.
3. Remove screws securing bottom outside edges of the control panel.
4. Pull unit out from the wall far enough to allow the back outside screws to be loosened.
5. Loosen the back outside screws securing control panel to backguard.
6. Grasp front lower outside edges of the control panel and push inward on the outside edges of the backguard to release the control panel front.

NOTE: Front edges of the control panel are difficult to release from backguard.

7. Once the control panel bottom edges are free, pull control panel forward and raise the control panel upward to release screws securing top back edges and allow control panel to tip forward.
8. Reverse procedure to reinstall control panel.

Control Board Assembly

1. Remove control panel, see “Control Panel” procedure, steps 1 through 6.
2. Remove screws securing control board bracket to control panel.
3. Label and disconnect terminal plug from control board assembly.
4. Reverse procedure to reinstall control board assembly.

Rocker Switch

1. Remove control panel, see "Control Panel" procedure for removal.
2. Disconnect and label wire terminals from rocker switch.
3. Squeeze tabs on rocker switch and push outward to release from control panel.
4 . Reverse procedure to reinstall indicator light.

Top Surface Valve and Spark Switch

1. Remove control panel, see “Front Control Panel Removal” procedure.
2. Remove spark switch by pulling straight off valve.
3. Remove screw securing valve to front manifold.
4. Replace and reassemble in reverse order.

Top of Surface Burner

1. Turn off electrical power and gas to the range.
2. Disconnect gas and power from unit.
3. Remove grates and caps.
4. Remove screws securing top surface burner to maintop.
5. Lift surface burner off.
6. Replace and reassemble in reverse order.

Bottom of Surface Burner

1. Remove maintop assembly, see "Maintop Assembly" procedure, steps 1 through 7.
2. Remove nut securing burner tubing to surface valve.
3. Replace and reassemble in reverse order.

Disassembly Procedures

WARNING To avoid risk of electrical shock, personal injury, or death: disconnect electrical and gas supply before servicing.

Oven Sensor

1. Disconnect power before servicing.
2. Open oven door and remove screws securing sensor to oven cavity.

NOTE: Gently pull wiring through cavity wall.

3. Disconnect oven sensor at the connector terminal and remove.
4. Reverse procedure to reinstall sensor.

NOTE: Verify connection is pushed through the insulation.

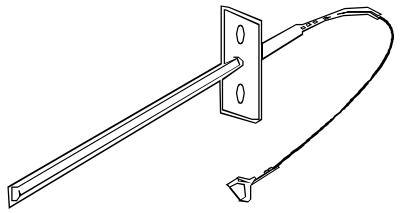

Convection Fan Assembly

1. Turn off power to unit.
2. Open oven door or remove oven door, see “Door Removal”.
3. Remove screws securing convection fan cover to convection fan assembly.
4. Remove screws securing convection fan assembly to rear of oven cavity.
5. Slide convection fan assembly down and tilt forward on the top portion to allow assembly to pass through rear oven cavity.
6. Disconnect and label wires from convection fan motor.
7. Reverse procedure to reinstall convection fan assembly.

Bake Burner and Ignitor

1. Turn off electrical power and gas to the range.
2. Disconnect gas and power from unit.
3. Remove oven door and racks.
4. Remove screws securing bottom bake cover.
5. Raise the back of the bake burner cover and slide cover back to release the front edge of cover and lift out of oven cavity.
6. Remove screws securing bake burner assembly to the oven chassis.
7. Maneuver bake burner from the burner orifice and out of the slotted location.
8. Pull forward on assembly to allow the ignitor terminal plug to pass through the back of the oven cavity.
9. Disconnect terminal plug and remove assembly from the oven cavity.
10. Remove screws securing ignitor to bake burner.
11. Replace and reassemble in reverse order.

Broil Burner and Ignitor

1. Turn off electrical power and gas to the range.
2. Disconnect gas and power from unit.
3. Remove oven door, and racks.
4. Remove screws securing ignitor wire plate cover to back of the oven cavity.
5. Maneuver ignitor wire terminal plug through the rear of the oven cavity.
6. Disconnect ignitor wire terminal plug.
7. Remove screws securing broiler to oven cavity.
8. Carefully maneuver burner off of the broiler orifice spud and remove from cavity.
9. Remove screws securing ignitor to broiler.
10. Remove wing nut securing flame spreader to broiler.
11. Replace and reassemble in reverse order.

Valve / Regulator Assembly

NOTE: Requires removal of range from installation position.

1. Turn off electrical power and gas to the range.
2. Disconnect gas and power from unit.
3. Remove nut securing broiler tubing to gas valve.
4. Remove nut securing bake tuning to gas valve.
5. Remove screws securing assembly to unit chassis.
6. Disconnect wires and gas lines to gas valve.
7. Replace and reassemble in reverse order.

Automatic Oven Door Latch Assembly

NOTE: Requires removal of range from installation position.

1. Remove maintop assembly, see "Maintop Assembly" procedure, steps 1 through 7.
2. Remove screws securing latch assembly to the front of the oven cavity outer shell.
3. Disconnect and label wire terminals from latch assembly.
4. Remove screws securing upper rear access panel to the back of the unit.
5. Remove screws securing latch assembly to the back of the unit chassis.
6. Reverse procedure to reinstall door latch assembly.

Spark Module

NOTE: Requires removal of range from installation position.

1. Remove screws securing lower rear access panel.
2. Disconnect and label wire connections from the spark module.
3. Remove screws securing spark module to unit chassis.
4. Replace and reverse procedure to reassemble.

©2003 Maytag Appliances Company

Disassembly Procedures

⚠ WARNING To avoid risk of electrical shock, personal injury, or death: disconnect electrical and gas supply before servicing.

Door Plunger Light Switch

1. Remove maintop assembly, see "Maintop Assembly" procedure, steps 1 through 7.
2. Label and disconnect wire terminals from switch.
3. Slide metal sleeve forward and flex wire the release from door plunger light switch.
4. Squeeze metal tab and push switch inward to remove.
5. Reverse procedure to reinstall door plunger light switch.

NOTE: Be sure to install door plunger light switch heat shield on new switch when replacing switch.

Oven Door Removal

⚠ WARNING

To avoid risk of personal injury or property damage, do not lift oven door by the handle.

1. Open oven door and place door hinge locking device into lock position.
2. Place oven door in first stop position, then grasp both sides and lift up off the hinges.
3. Reverse procedure to reinstall oven door.

Oven Door Hinge Receptacle

1. Turn off power to unit.
2. Remove oven door, see "Oven Door Removal" procedure.
3. Remove maintop assembly, see "Maintop Assembly" procedure, steps 1 through 4.
4. Remove side panel, see "Side Panel Removal" procedures.
5. Remove the top and bottom screws securing hinge assembly to the front frame.
6. Remove hinge from oven chassis.
7. Reverse procedure to reinstall oven door hinge.

Side Panel Removal

1. Turn off power to unit.
2. Remove oven door, see "Oven Door Removal" procedure.
3. Remove maintop assembly, see "Maintop Assembly" procedure, steps 1 through 4.
4. Remove screws securing lower rear galvanized cover from unit.
5. Remove screws securing top and back of side panel.
6. Pull rear of side panel away from range then slide side panel forward to release from side panel spacers.
7. Reverse procedure to reinstall side panel.

Backguard

NOTE: Requires removal of range from installation position.

1. Remove maintop assembly, see "Maintop Assembly" procedure, steps 1 through 7.
2. Remove screws securing upper back panel form unit.
3. Remove screws securing bottom outside edges of the backguard to unit chassis.
4. Reverse procedure to reinstall backguard.

Storage Drawer and Storage Drawer Panel Removal

1. Pull drawer straight out to first stop. Lift front and pull out to second stop.
2. Let front of door rest on floor. Place hands toward back of drawer and lift it out.

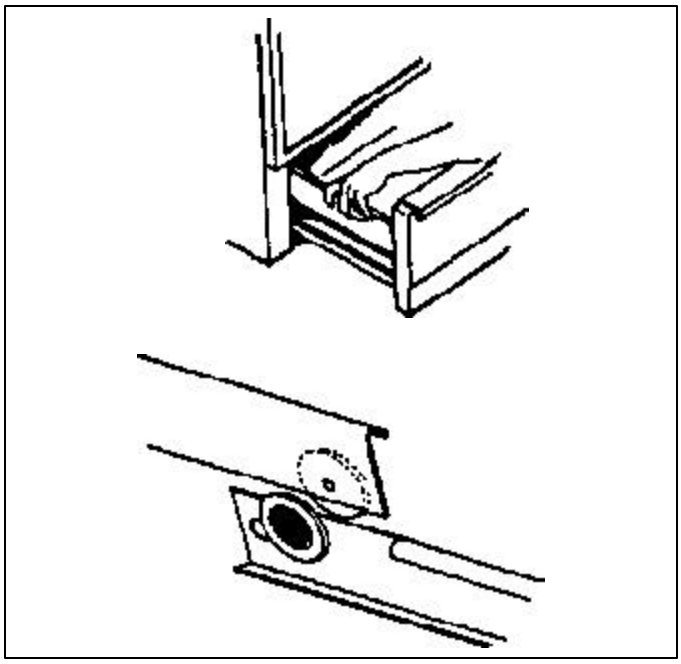

3. To replace:
   a. Place the set of rollers on the drawer behind the set of rollers on the oven.
   b. Align the guides and push the drawer back into position.

Disassembly Procedures

WARNING To avoid risk of electrical shock, personal injury, or death: disconnect electrical and gas supply before servicing.

Storage Drawer Track Removal

1. Remove the storage drawer by pulling it out to the fully open or stop position, lifting the drawer at the rear to disengage the drawer track rollers from the drawer runners, and sliding the drawer out of the range.
2. The tracks are mounted to a rear support and the frame of the range. Remove the two track mounting screws and remove the track. If the track support is being replaced, remove the mounting screw securing it to the side frame and remove the support.

Oven Light Assembly

Oven Light Bulb/Oven Light Socket

NOTE: Requires removal of unit from cabinet to replace oven light socket.

1. Turn off power to unit.
2. Open oven door to gain access to oven light.
3. Unscrew (counterclockwise) glass knurled dome.
4. Unscrew (counterclockwise) oven light bulb.

NOTE: To avoid damaging the new bulb and decreasing life of the bulb, do not touch new bulb with bare hands or fingers.
Hold with a cloth or paper towel.

NOTE: Proceed with the following steps for oven light socket removal.

5. Remove unit from installation position, see “Removing and Replacing Oven” procedure.
6. Disconnect or unplug the power cord leading from unit to fuse box or junction box depending on unit.
7. Remove screws securing back cover and remove.
8. Carefully displace fiberglass insulation away from rear of light socket.
9. Disconnect wires from light socket.
10. Push socket assembly inwards into the oven cavity.
11. Reverse procedure to reinstall light socket. Reposition insulation around lamp socket.

NOTE: Reposition fiberglass insulation around oven light socket to eliminate possibility of heat related problems.

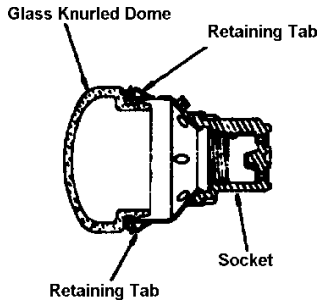

Frameless Door Disassembly

1. Remove oven door, see "Oven Door Removal" procedure.
2. Place door on a protected surface.
3. Slide outer oven door glass and trim towards the bottom of the oven door and remove.
4. Detach right and left trim pieces for outer door glass.

NOTE: Proceed with the following steps for door hinge, door handle, and inner door disassembly.

5. Remove screws securing door hinge to oven door chassis.

NOTE: Proceed with the following steps for door handle and inner door disassembly.

6. Remove screws securing top door handle trim to oven door chassis.
7. Remove screws securing door handle brackets to inner door panel.
8. Lift upward on the lower side of the door handle to release side alignment screws and rotate towards the top of the oven door to release and remove.
9. Remove screws securing door handle to door handle brackets.

NOTE: Proceed with the following steps for inner door disassembly.

10. Remove screws securing lower door glass retainer to door baffle and remove.
11. Slide inner door glass downward to release from upper door glass retainers and remove.
12. Remove screws securing door baffle to door lining and remove.
13. Remove insulation from oven door.
14. Lift inner glass and glass frame from oven door.
15. Reverse procedure to reassemble oven door.

Power Cord

NOTE: Requires removal of range from installation position.

1. Turn off electrical power and gas to the range.
2. Disconnect gas and power cord from unit.
3. Remove storage drawer.
4. Disconnect power cord plug located behind storage drawer.
5. Remove screw securing cord to unit.
6. Replace and reassemble in reverse order.

©2003 Maytag Appliances Company

Disassembly Procedures

WARNING	To avoid risk of electrical shock, personal injury, or death: disconnect electrical and gas supply before servicing.

Frameless Oven Door

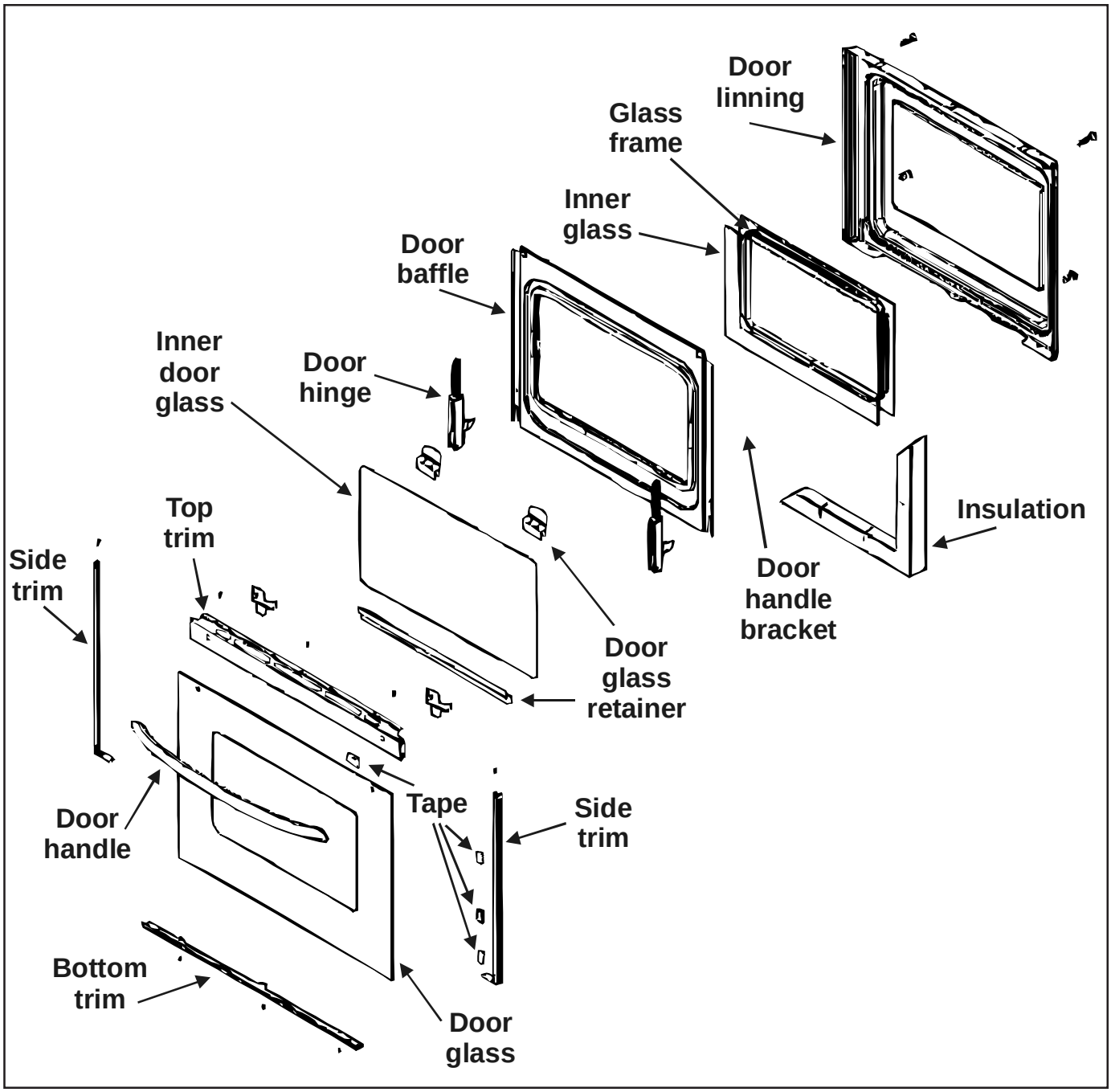

Appendix A

Gas Conversion

General

This range is equipped with fixed orifices on all burners and a convertible appliance pressure regulator. The unit serial plate states which gas it was adjusted for at the factory. To convert the unit to either Natural gas or LP gas will require replacing the oven orifice hoods, replacement of top burner orifices, conversion of the appliance pressure regulator and adjustment of air shutters on both oven burners.

Gas inlet pressure to the appliance pressure regulator should be as follows for both operation and checking of appliance pressure regulator setting:

INLET PRESSURE IN INCHES OF WATER COLUMN	NATURAL GAS	LP GAS
Minimum	5	11
Maximum	14	14

Appliance Pressure Regulator Conversion

The unit appliance pressure regulator must be set to match the type gas supply used. If converting from Natural gas to LP gas, the appliance pressure regulator must be converted to regulate LP gas. If converting from LP gas to Natural gas, the appliance pressure regulator must be converted to regulate Natural gas. The regulator is located at the bottom of the back of the range.

Follow the instructions below to convert the regulator for use with LP gas. (This appliance is shipped from the factory adjusted for use with Natural gas.)

1. Remove plastic cover from pressure regulator neck. See figure 1.

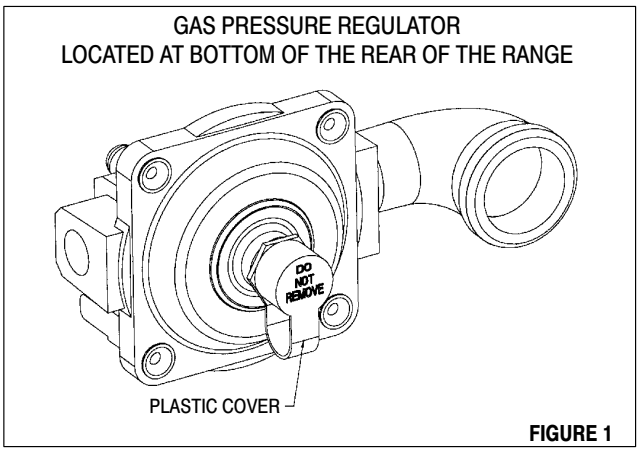

FIGURE 1

2. Unscrew the hex shaped conversion cap from the neck of the regulator. (A wrench may be required to loosen the cap). See figure 2.

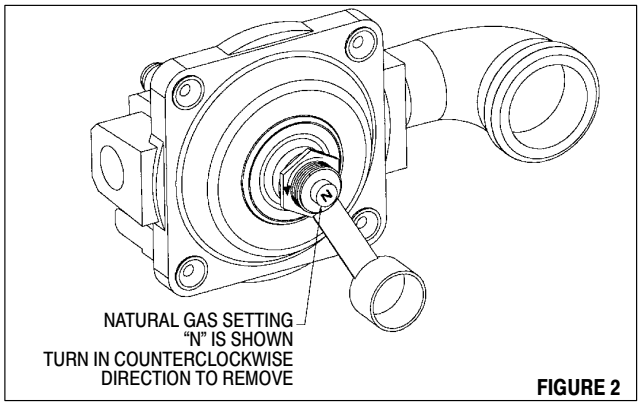

FIGURE 2

3. Invert the cap and screw it back into place. See figure 3.

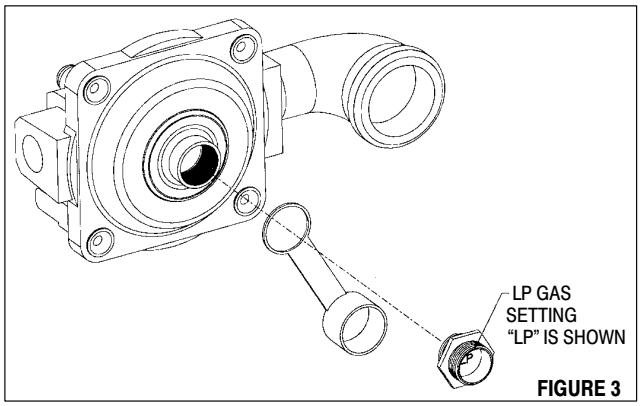

FIGURE 3

4. Screw the cap securely back into place in the neck of the pressure regulator. (The cap need not be wrench-tightened upon replacement. Firm finger tightening will secure the cap). Replace plastic cover over cap. See figure 4.

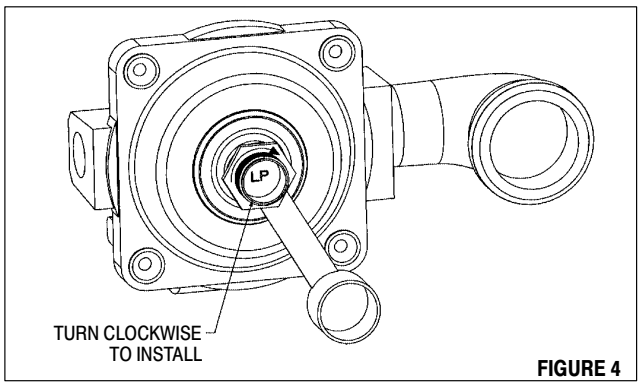

FIGURE 4

8101P598-60
(07-03-00)

 ©2003 Maytag Appliances Company

Surface Burners To LP/Propane Gas

CAUTION: This cooktop is not removable. Do not attempt to remove this cooktop. Save the natural gas orifices removed from the appliance for possible future conversion to natural gas.

For All Burner Locations:

NOTE: Surface burner orifices are located in LP conversion kit plastic bag attached to the back of the range.

a. Remove the top grates and burner caps.

b. Remove each burner head by removing two screws. (See figure 1) **NOTE:** Convert one burner at a time to avoid incorrect installation.

c. **IMPORTANT:** Replace these two screws after removing burner head. The screws will secure orifice holder and prevent damage to electrode or tubing while changing orifice.

d. Remove the factory installed natural gas orifices from the center of the orifice holders using a 7mm nut driver. (See figure 1). Remember to keep the original natural gas orifices for possible later conversion to natural gas.

e. Replace the orifice in each of the four or five orifice holders with the correct LP/Propane gas orifice (see figure 2).

NOTE: See figure 3 for natural gas orifice size and information.

IMPORTANT: Make sure orifice is secured in nut driver before attempting to install orifice.

TIP: Insert tape into the head of the 7mm nut driver to help prevent the orifice from falling into the range. Tighten each orifice until snug. Use caution not to over tighten.

f. When orifice change is complete, remove two screws then re-install burner head and secure with same two screws.

g. Replace the burner caps and grates using caution when replacing each burner cap so that electrode is not damaged.

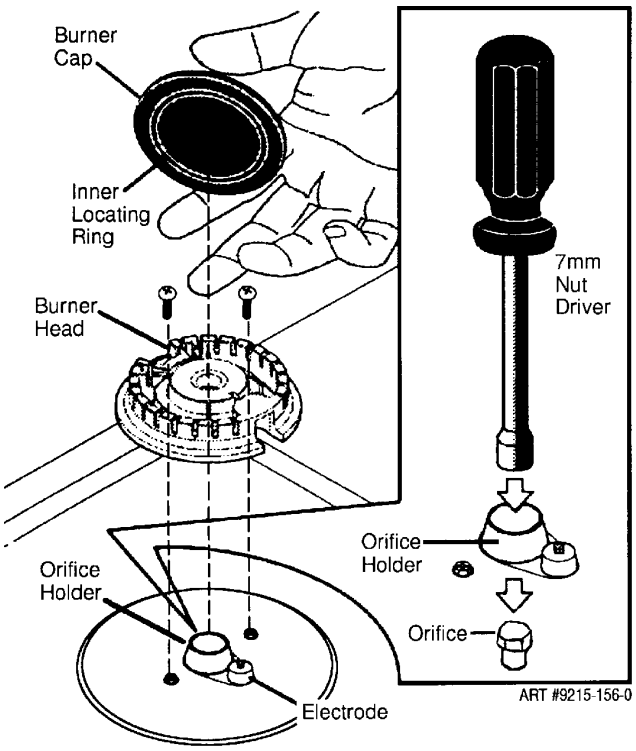

FIGURE 1

©2003 Maytag Appliances Company

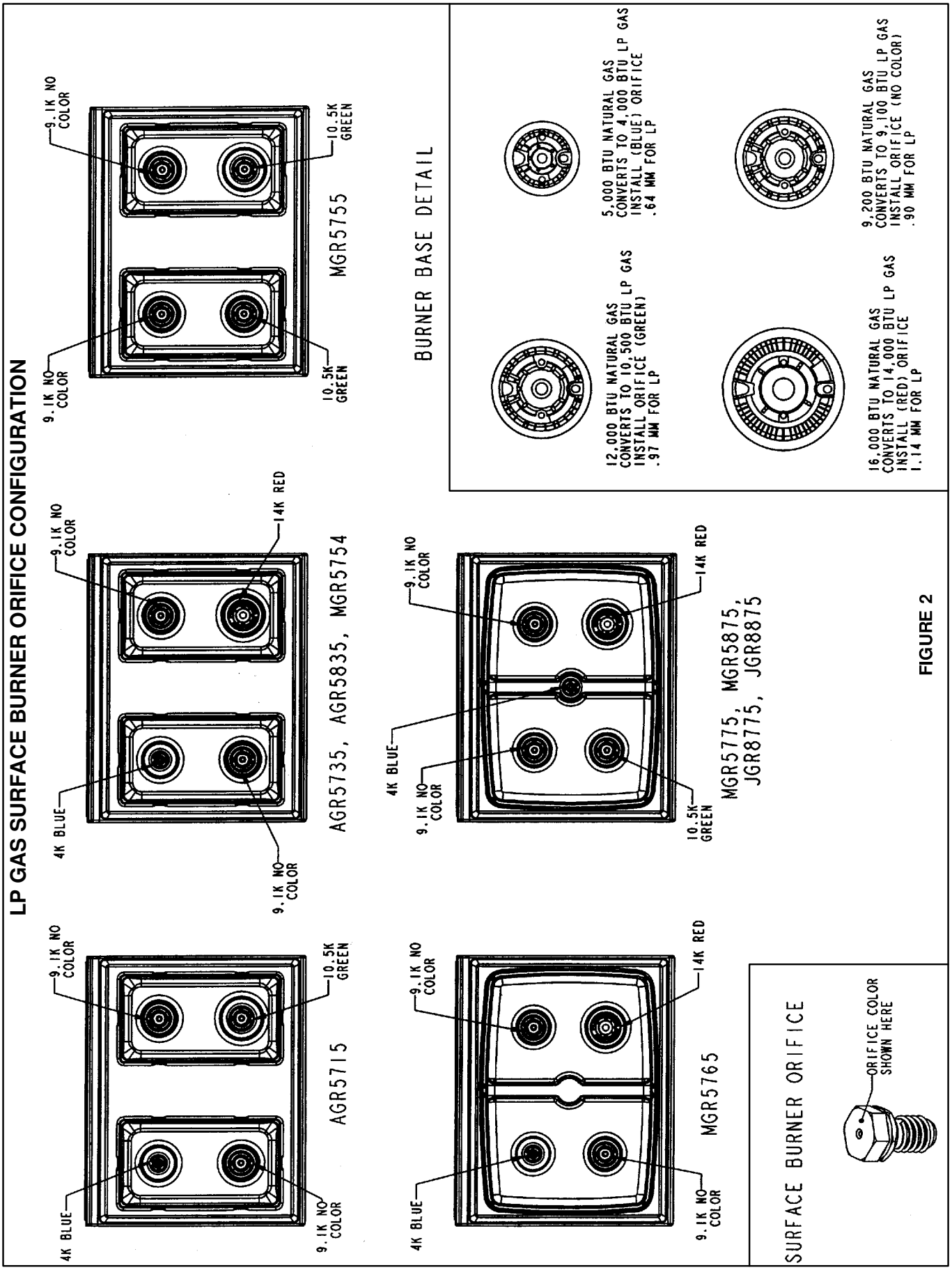

FIGURE 2

©2003 Maytag Appliances Company

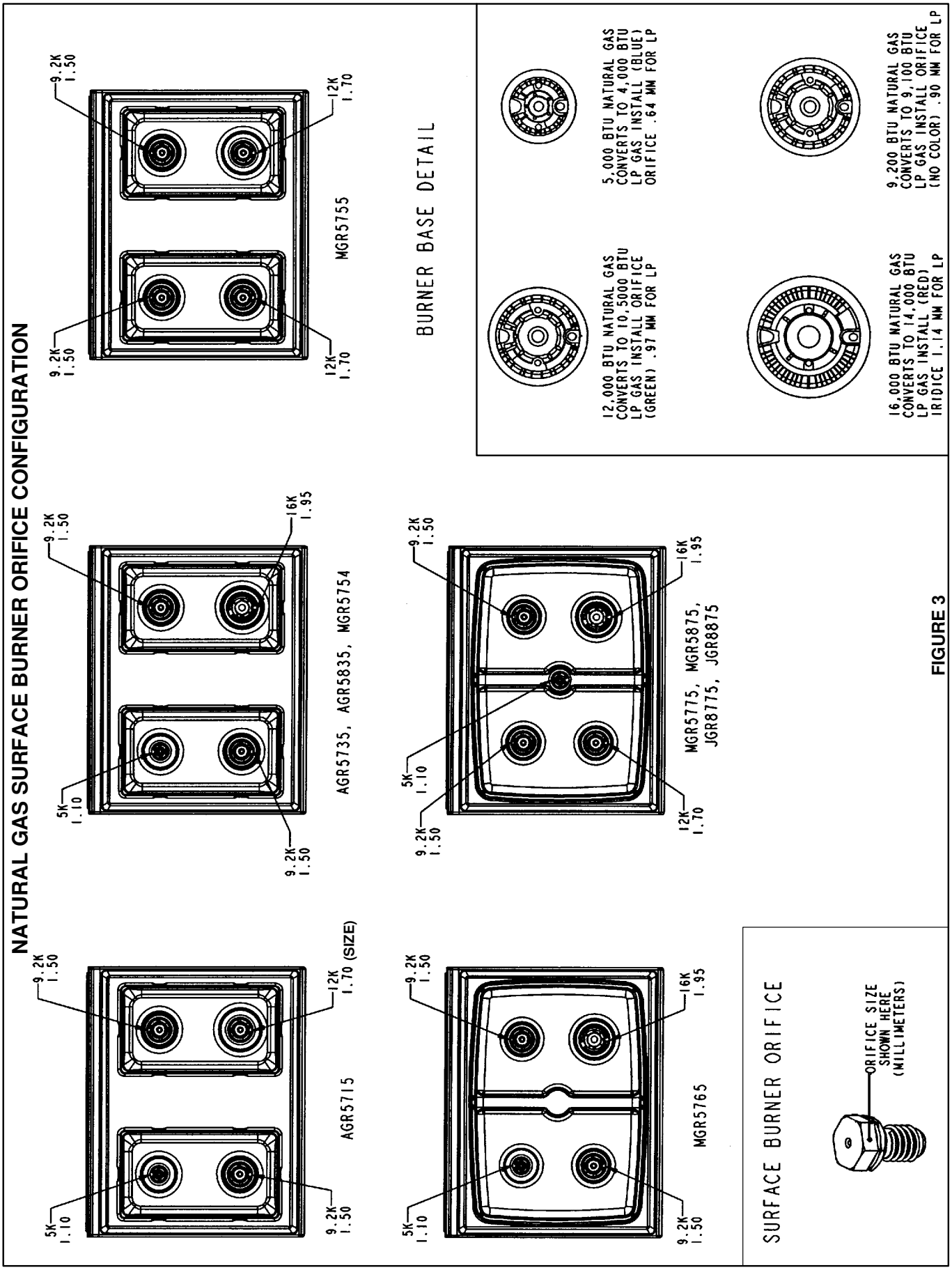

FIGURE 3

©2003 Maytag Appliances Company

Converting Bake Burner Orifice

To Convert Bake Burner Orifice:

1. Remove ALL oven racks.
2. Remove two screws in rear of oven which hold oven bottom in place. See figure 1.
3. Remove oven bottom by raising rear of part so that front edge clears front flange on front frame. Then lift oven bottom straight up - then forward to remove. See figure 2.
4. Remove oven burner by removing one screw in front of burner and two screws at rear next to ignitor. Raise rear part of burner up till it clears the opening in the bake chamber, then gently lay the burner to the right side in the bake chamber. It is not necessary to unplug or remove the ignitor from the burner. See figure 3.

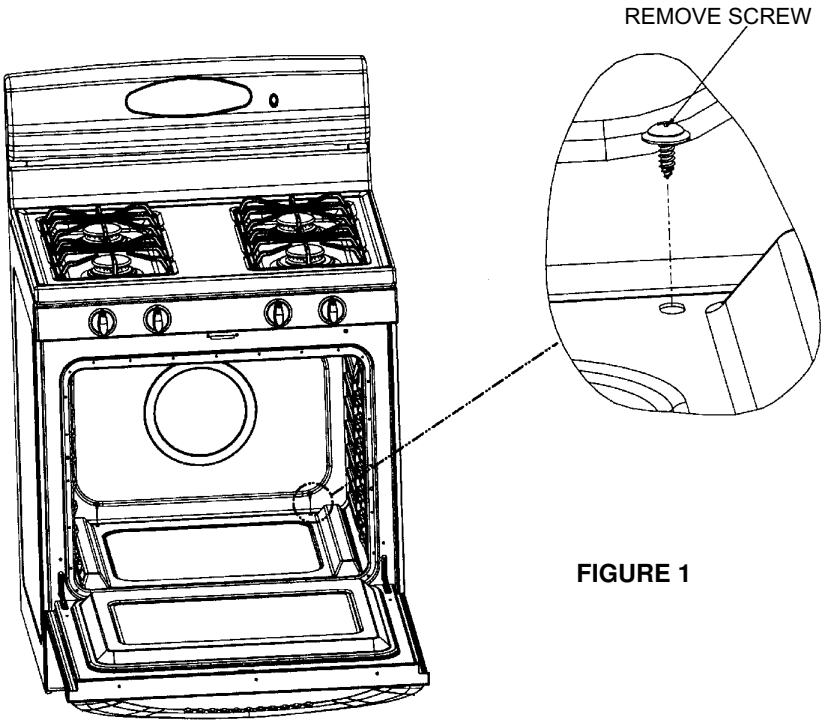

FIGURE 1

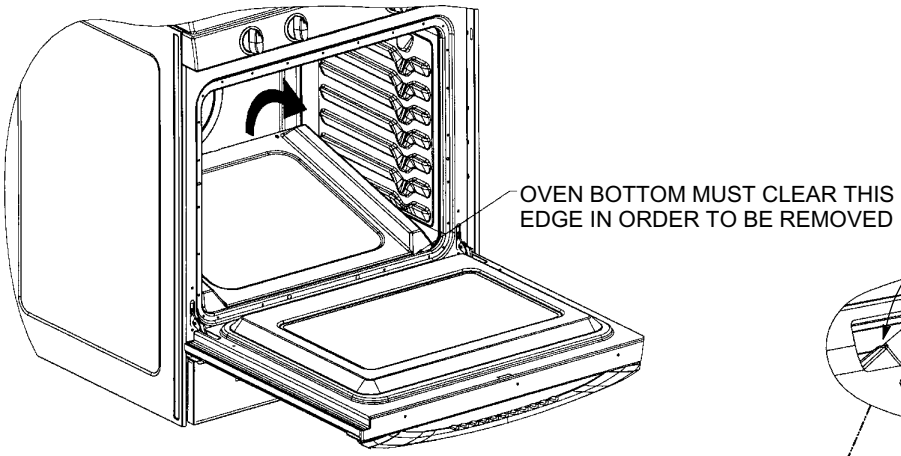

FIGURE 2

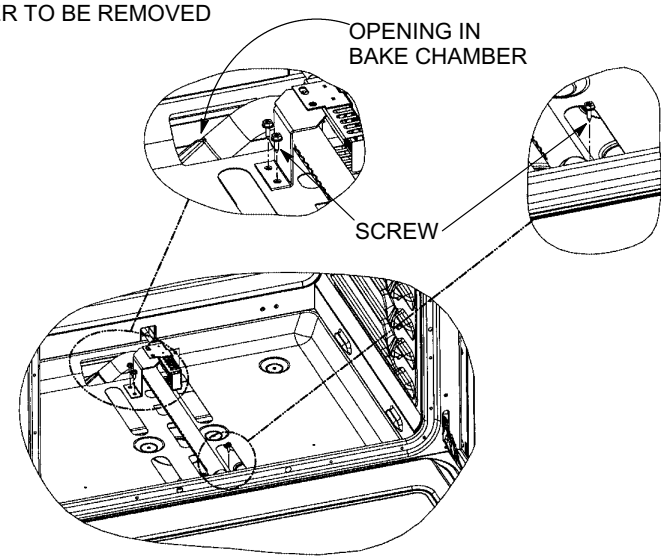

FIGURE 3

 ©2003 Maytag Appliances Company

Gas Conversion

5. Insert 1/2″ deep-well socket with extension through the opening in the bake chamber from which the burner was removed. Insert tool at a downward angle to the left till it seats over the hex on the bake orifice.

   Turn socket counter-clockwise until orifice is loose, remove orifice and tool through opening in bake chamber.

   NOTE: The bake orifice can also be viewed under the range by raising the oven door and removing the storage drawer. See figure 4.

6. Locate LP bake burner orifice in LP conversion kit plastic bag mounted at rear of range. Orifice will be marked “.049”.

7. Install LP orifice in same 1/2″ socket and attach to bake burner valve by repeating procedure noted in step #5 above. Turn socket clockwise until resistance is felt, then another 1/4 turn to fully tighten.

8. Before re-installing oven bottom, refer to the section titled “Range Adjustments” in the unit installation manual for proper air shutter adjustment on bake burner.

9. Reverse steps 1 - 4 above to complete the conversion.

   IMPORTANT: Be sure end of burner is engaged over burner orifice.

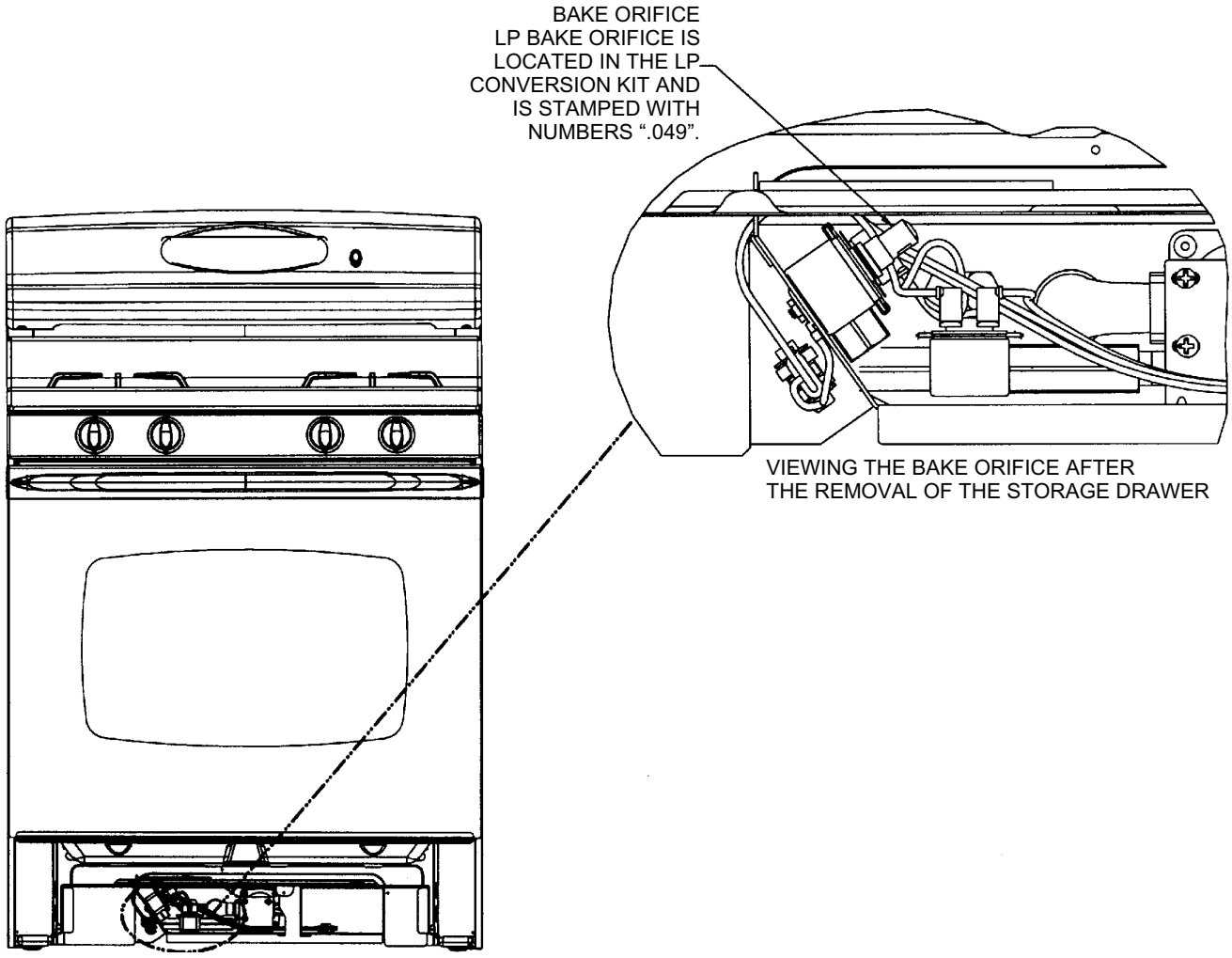

FIGURE 4

©2003 Maytag Appliances Company

Converting Broil Burner Orifice

To Convert Broil Burner Orifice:

1. Remove ALL oven racks.
2. Remove one screw in front of broil burner, then gently position broil burner assembly against rear wall of oven cavity. This will expose the broil orifice. See figures 1 and 2.
3. Using 1/2″ socket, remove broil orifice by turning counter-clockwise till orifice is loose from brass fitting. See figure 2.
4. Locate LP broil burner orifice in LP conversion kit plastic bag mounted at rear of range. Orifice will be marked “#57” and colored green.
5. Repeat step #3 above to install broil orifice. Turn socket clockwise until resistance is felt, then another 1/4 turn to fully tighten.
6. Reverse step #2 above to re-install broil burner to complete the conversion.

   IMPORTANT: Be sure end of burner is engaged over burner orifice.

   NOTE: Pin attached at radius of bend on burner must be inserted in embossed hole in top rear wall of oven cavity.

Broil Burner Air Shutter Adjustment

Refer to section titled “Range Adjustments” in installation manual for proper air shutter adjustment after orifice broil is changed.

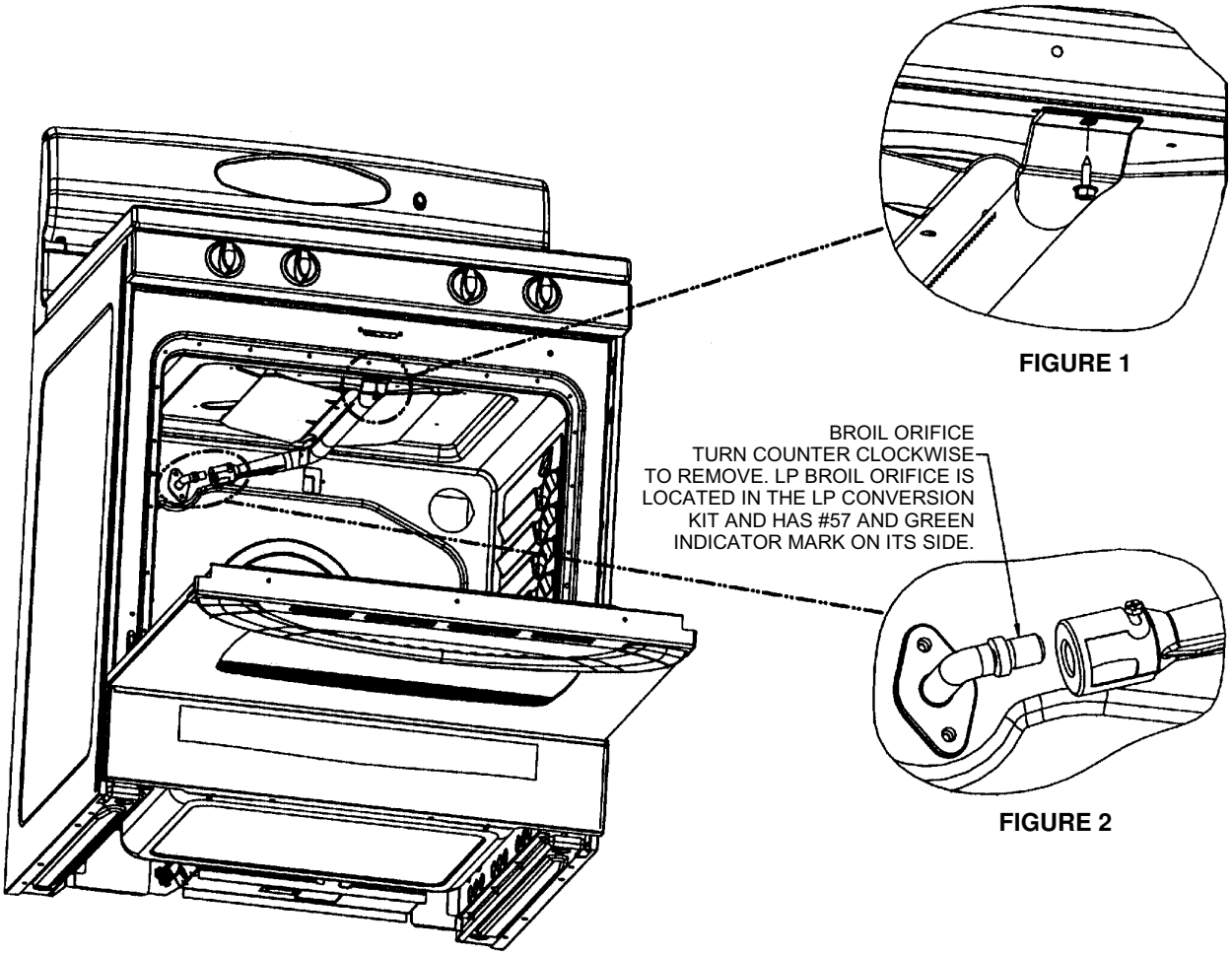

FIGURE 1

FIGURE 2

 ©2003 Maytag Appliances Company

IMPORTANT

Low Flow Conversion For Surface Burner Valves

Complete pressure regulator and orifice conversion before making valve low flow adjustment.

To convert the surface burner valve from Natural to LP Gas, the minimum flow MUST be adjusted.

1. Be sure valve is turned to the “LOW” position as shown on the knob **BEFORE** making adjustments. See figure 1. Otherwise, the valve could be damaged.
2. Remove the knob.
3. Using pliers, gently hold the valve stem in the low position. See figure 2.
4. Insert a slender, thin-blade screwdriver into the recess at center of valve stem and engage blade with slot in adjusting screw.
5. Turn center stem adjusting screw to set flame size. This should require about 1/4 turn, more or less.
6. Replace control knob when adjustment is completed.

Proper adjustment will produce a stable, steady blue flame of minimum size. The final adjustment should be checked by turning knob from high to low several times without extinguishing the flame.

This adjustment, at low setting, will automatically provide the proper flame size at medium setting.

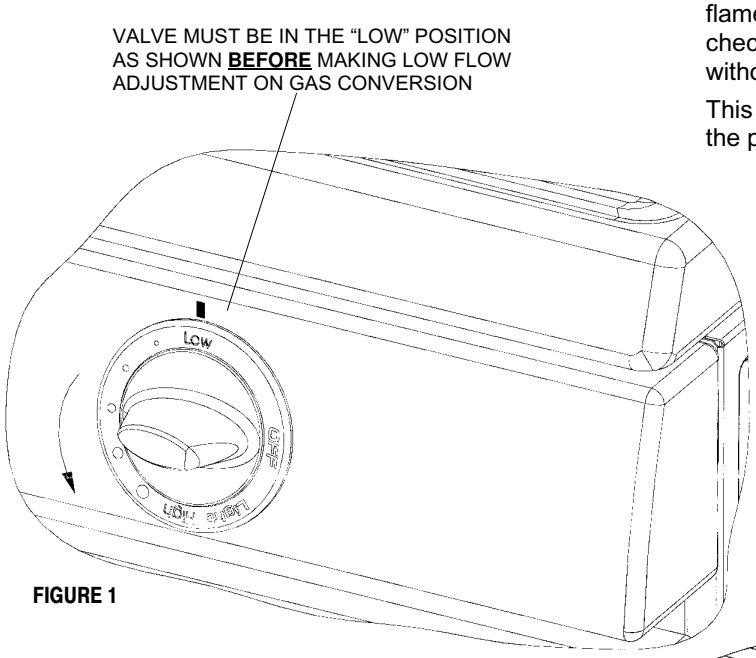

FIGURE 1

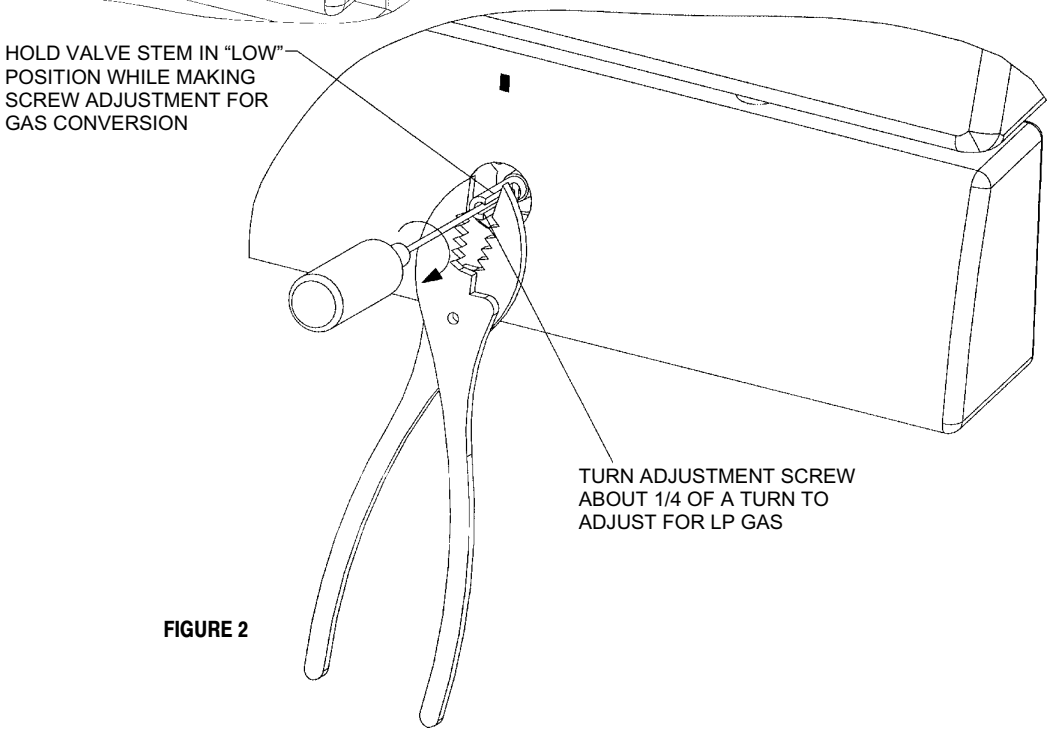

FIGURE 2

©2003 Maytag Appliances Company